Vacuum Products Series



MAGNOX

OUR PEOPLE MAKE THE DIFFERENCE

www.magnox.com.cn

MAGNOX

公司简介

苏州迈格诺科洁净材料有限公司自2012年成立以来,一直坚持以超纯不锈钢为母材,专注于各类超高洁净系统和精密零部件的设计、加工、制造及销售。我们致力于为客户提供高质量、成本效益兼备的标准件及定制化产品,同时提供卓越的全程供应链管理服务。

公司配备了完整的生产线,涵盖精密机械加工、精密焊接、电解抛光、化学清洗以及精密测量等关键制程。拥有通过第三方认证的面积超1000m²的百级洁净间,可满足半导体行业超纯气体管路、气体盘面和精密零组件的焊接、清洗、组装、测试及无尘包装需求。此外我们的各类加工及检测设备均来自国际一线品牌,确保产品质量的卓越水准。

公司已通过ISO 9001质量管理体系认证、ISO 3834焊接质量体系认证、TUV PED 4.3压力管件认证、美国3A卫生级管件认证。我们的团队汇聚了设计、工艺、制造、质量与制程控制以及供应商管理等多领域的专业人才。他们技术精湛、经验丰富且敬业踏实,在业界赢得了良好的信誉与口碑。

迈格诺科始终坚持以客户为导向,广泛服务于人工智能、生物制药、食品饮料、精密化工、太阳能光伏、半导体芯片、平板显示以及科研、航空航天等多元化产业。凭借深厚的行业经验和专业知识,我们深刻理解这些行业的严苛要求,并能提供成熟的解决方案。在系统洁净度、焊接产品形位精度等关键领域,我们拥有一套完善的工艺方案和操作标准。迈格诺科承诺,在客户的严格要求下,我们将提供最优的解决方案,确保完美实现客户的目标需求。



INTRODUCTION

Since its establishment in 2012, Suzhou Magnox Hygienic Materials Co., Ltd. has been adhering to the use of ultra - pure stainless steel as the base material, and has been focusing on the design, processing, manufacturing and sales of various ultra - high - cleanliness systems and precision parts. We are committed to providing customers with high - quality, cost - effective standard parts and customized products, and at the same time, offering excellent end - to - end supply chain management services.

The company is equipped with a complete production line, covering key processes such as precision machining, precision welding, electrolytic polishing, chemical cleaning and precision measurement. It has a class - 100 clean room certified by a third - party with an area of over 1000 m^2, which can meet the needs of welding, cleaning, assembly, testing and dust - free packaging of ultra - pure gas pipelines, gas panels and precision components in the semiconductor industry. In addition, all kinds of our processing and testing equipment come from first - tier international brands, ensuring the excellence of product quality.

The company has passed the ISO 9001 Quality Management System certification, ISO 3834 Welding Quality System certification, TUV PED 4.3 pressure pipe fitting certification and American 3A sanitary pipe fitting certification. Our team brings together professionals from various fields such as design, process, manufacturing, quality and process control, and supplier management. They are highly skilled, experienced, dedicated and down - to - earth, winning a good reputation in the industry.

Magnox always adheres to a customer - oriented approach and widely serves diverse industries such as artificial intelligence, biopharmaceuticals, food and beverages, fine chemicals, solar photovoltaics, semiconductor chips, flat - panel displays, as well as scientific research, aerospace. With profound industry experience and professional knowledge, we deeply understand the stringent requirements of these industries and can provide mature solutions. In key areas such as system cleanliness and the form and position accuracy of welded products, we have a complete set of process plans and operating standards. Magnox promises that under the strict requirements of customers, we will provide the best solutions to ensure the perfect realization of customers' target needs.



Table of Contents

MAGNOX

01 Isolation Valves 1–34

1.1 Vacuum Angle Valves 1-14
1.2 Vacuum Butterfly Valves 15-16
1.3 Vacuum Ball Valves 17-20
1.4 Vacuum Gate Valves 21-30
1.5 Vacuum Vent Valves 31-32
1.6 All Metal Bakeable Compact Manual Angle Valve 33
1.7 Vacuum Check Valves 34-35

02 Chambers & Weldments 35–55

2.1 Standard Vacuum Chamber 35-42
2.2 Overview Of Our Capabilities 43-45
2.3 How to specify a Vacuum Chamber 46-54
2.4 Fast Vacuum Pump Line Weldments 55

03 Flanges & Fittings 56–131

3.1 KF Series 56-65
3.2 ISO Series 66-75
3.3 CF Series 76-87
3.4 Adapter Fittings 88-95
3.5 Bellows & Flexible Hose 96-114
3.6 Welded Metal Bellows 115-121
3.7 Tube & Butt Weld Fittings 122-131

04 Heater Jackets 132–134

4.1 Heater Jackets 132-134

05 Viewport & Shutters 135–142

5.1 Zero Length Viewport 135-138
5.2 Demountable Viewport 139-140
5.3 Quick Access Doors 141
5.4 Glass Adapters 142
5.5 Viewport Stubs 142

06 Liquid & Ceramic Breaks Feedthroughs 143–150

6.1 Liquid Feedthroughs 144-146
6.2 Ceramic Breaks 147-150

07 Electrical & Instrumentation Feedthroughs 151–206

7.1 Electrical Feedthroughs 152-166
7.2 BNC Feedthroughs 167-168
7.3 Miniature High Voltage(MHV) 169-170
7.4 SHV-B、5、10、20 Feedthroughs 171-175
7.5 Type N Coaxial Feedthroughs 176-177
7.6 SMA Coaxial Feedthroughs 178-179
7.7 SMB Coaxial Feedthroughs 180
7.8 BNC TO Microdot Coaxial Feedthroughs 181
7.9 Multi-Pin, Circular (MPC) Feedthroughs 182-183
7.10 MPDT Sub D-Type 184
7.11 Subminiature-C Multipin 185
7.12 USB Feedthroughs 186
7.13 MS Multi-Pin 187-188
7.14 MPT Multi-Pin 189
7.15 Type C Mini Plug 190
7.16 Type C Mini Plug Plus Power 191
7.17 Type E Mini Plug 192
7.18 Type E Mini Plug Plus Power 193
7.19 Type E Push-On 194
7.20 Type J Mini Plug 195
7.21 Type J Mil-Spec Plug 196-197
7.22 Type J Mini Plug Plus Power 198
7.23 Type J Push-On 199
7.24 Type K Mini Plug Plus Power 200-201
7.25 Type K Mil-Spec Plug 202-203
7.26 Type K Push-On 204
7.27 Type R Feedthroughs 205
7.28 Type T Feedthroughs 206

08 Appendix 207–210



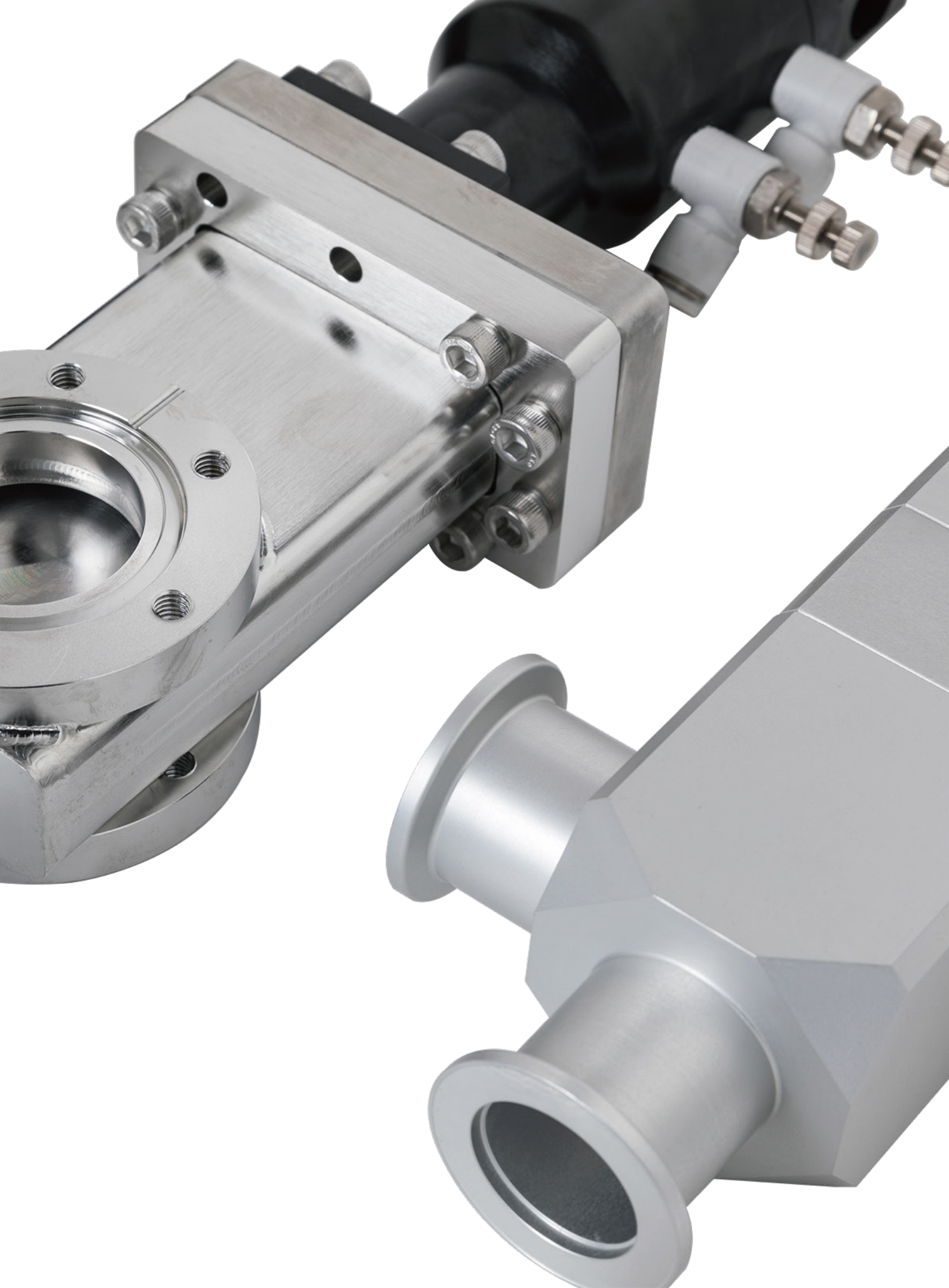

1 Isolation Valves

1.1 Vacuum Poppet Valves..... 1-14

1.2 Vacuum Butterfly Valves..... 15-16

1.3 Vacuum Ball Valves 17-20

1.4 Vacuum Gate Valves..... 21-30

1.5 Vacuum Vent Valves..... 31-32

1.6 All Metal Bakeable Compact Manual Angle Valve 33

1.6 All Metal Bakeable Compact Manual Angle Valve 33

1.7 Vacuum Check Valves.....34-35

Construction
产品描述

The angle valve's applications include rough pumping shut-off, foreline switching between pumps, cryo-sorption pump shut-off isolating foreline traps, UHV shut-off, sorption trap isolation, isolating sections baked to high temperature, and more.

As the name implies, the valve's ports are at 90° with the flapper's motion along the axis of one port. Although large-diameter angle valves (ften called poppet valves) exist, the most popular sizes have ports between/" and 3". Their right angle construction reduces the gas conductance for a given bore-size to somewhat less than the equivalent length straight tube.

The flapper is sealed by o-ring, elastomeric disk, or soft meta/hard metal. The last named can be baked to high temperatureand are extensively used on UHV systems. Although other actuator seals may exist, by far the most common is the flex metal bellows seal. The bellows' "outer end is usually welded to a plate attached to the actuator shaft. The "inner"end is sealed to the body by using either an o-ring or knife-edge copper gasket seal similar to the CF flange.

Manually Angle Valve
手动角阀

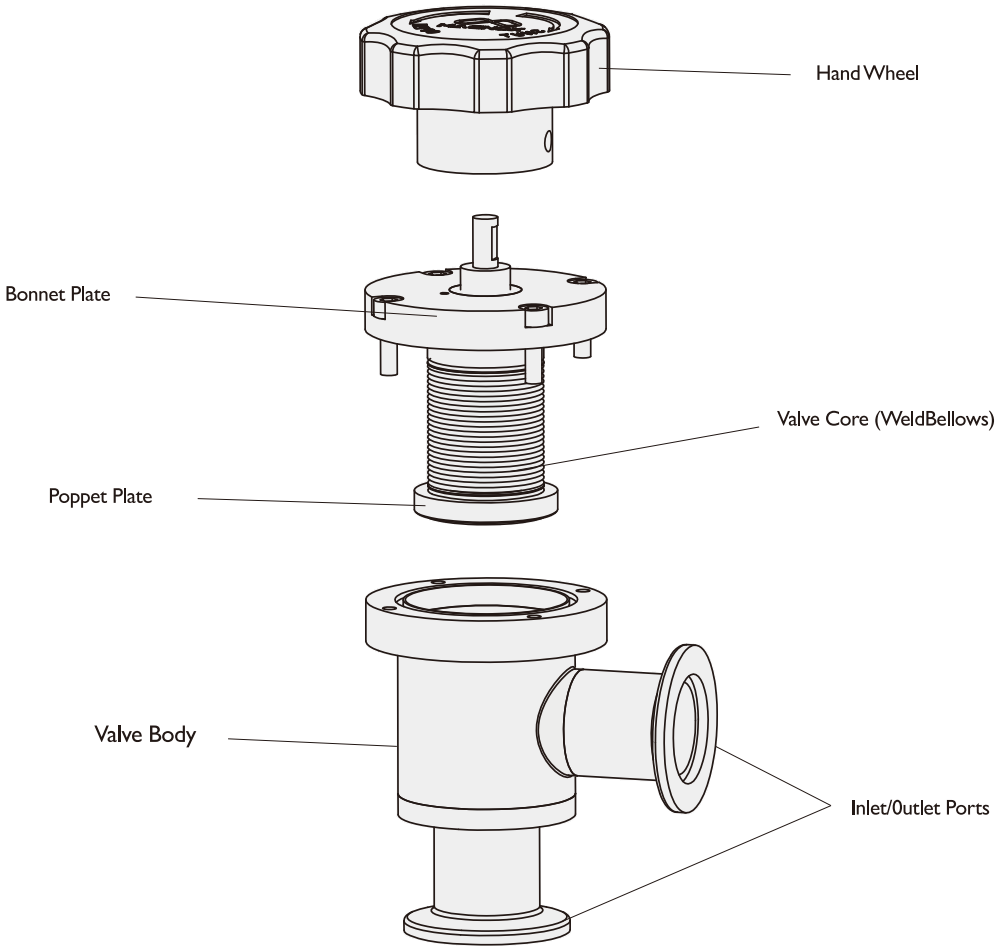

Construction
产品描述

Angle valves are actuated manualy, by pneumatc cylinder, or by electro-magnetics.Valves using he last mechanism are someimes called 'solenoid valves,' but the similarity of name to valves that divert compressed air in pneumatic valve actuation (noted earlier) causes contusion.Here, the 'solenoid' directy actuates the valve's flapper.This is a vacuum valve(not a compressed air valve) and is attractive for automating some parts of a system without the need for compressed air.

Thee valves are essentially on-off devices and are rarely used for conductance contorl (see below) except in the most primtive, manual way. Some advantages are constuction simpiciy and ease of mounting/demounting. Positioning a valve between two (rigid tubes with a common centerline, or parallel/offset enterlines, is more diffcult than using an angle valve and tubes at 90°.

Alhough well able to withstand 15 psi overpressure on either side of the flapper, the valve is often mounted with the fapper o-ring facing the nomaly evacuated space.A popular version of this valve is known as the block valve because it is manufactured from a block of aluminum.

Pneumatic Angle Valves
气动角阀

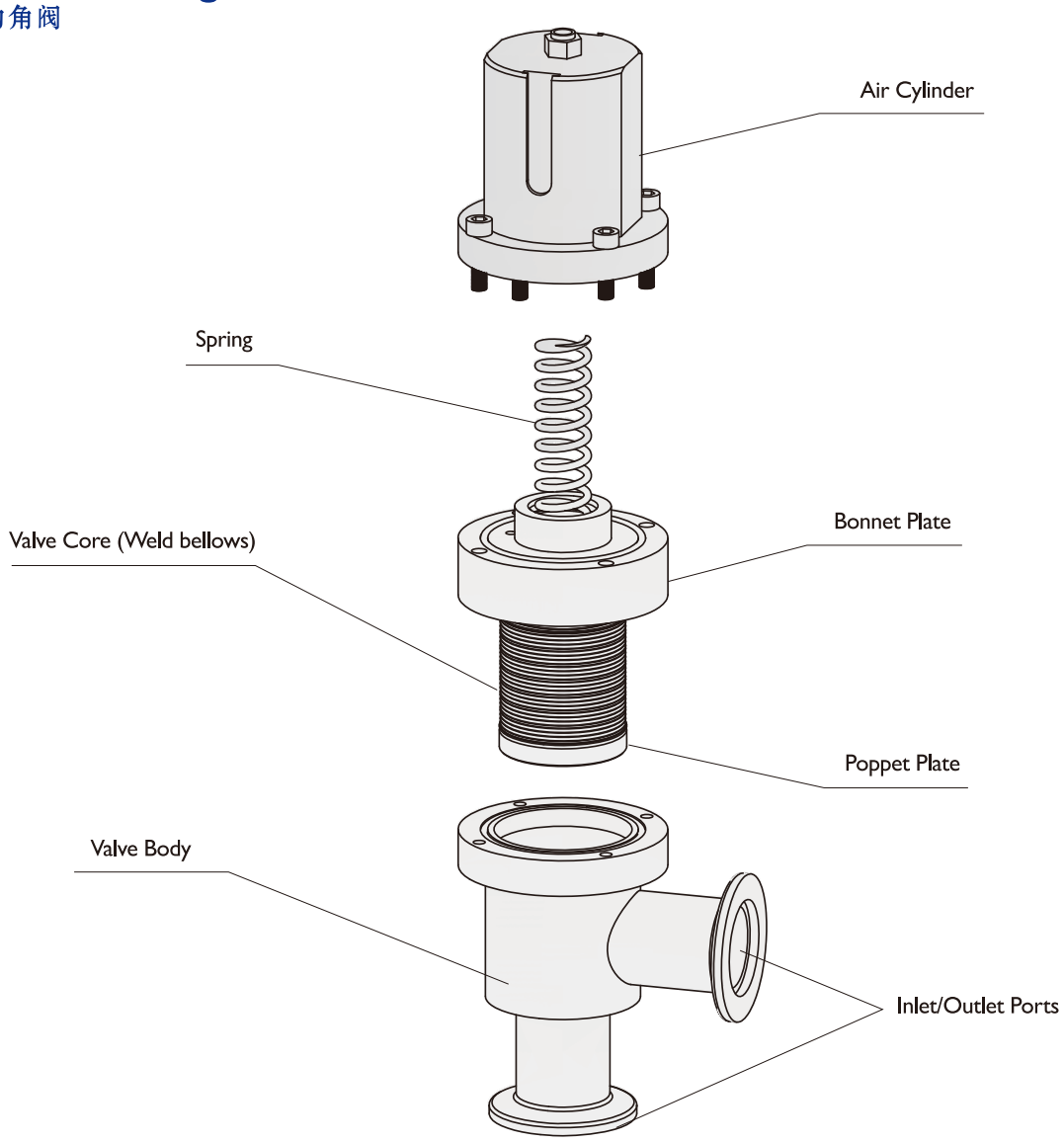

Technical Data For General Vacuum Angle Valves
通用真空角阀技术参数

Valve Spool / Grade	Ultra High Vacuum	High Vacuum
Valve Spool	Welded Metal Bellows	Welded Metal Bellows
Gate seal	FKM o-ring (Optional for FFKM)	FKM o-ring (Optional for FFKM)
Bonnet seal	OFHC metal gasket	FKM
Operate pressure range	2,000 mbar~1.33x10^{-10} mbar	2,000 mbar~1.33x10^{-8} mbar
Leak rate	1 33x10^{-9} mbar l/s He	1 33x10^{-9} mbar l/s He
Cycle life	Valve Core SUS316L 300，000 Cycles	Valve Core AM350 1,000,000 Cycles
Temperature for valve body	250°C (482°F) Open, 200°C (392°F) Closed	
Temperature for actuator	100°C (212°F)	
Temperature for solenoid / position indicator	80°C	
Bake temperature	200°C (392°F) for FFKM gate seal	100°C (212°F) for FKM gate seal
Valve body material	SS304L (Optional for SS316L)	
Mechanism material	SS304L	
Actuator material	Aluminum	
Mounting position	Any	
Position indicator (Optional)	Optional magnetic sensor with wire end	
Solenoid (optional)	Optional for 24V DC, standard	
Failure protection (included as standard)	Spring closed for KF16, KF25, KF40, KF50, CF1.33", CF2.75", CF3.38"	

Flange Size	KF16/CF16	KF25/CF25	KF40/CF35	KF50/CF50	ISO63/CF63	ISO80/CF80	ISO100/CF100	ISO160/CF160
Maximum Differential Pressure At Opening	2000 mbar							
Maximum Differential Pressure against Gate	2700 mbar	2400 mbar	2300 mbar	2000 mbar	3900 mbar			4000 mbar
Pneumatic Valve Open & Close Time /S	0.3/0.5	0.3/0.5	0.5/0.8	0.5/0.8	0.7/0.7	0.7/0.7	0.8/0.8	1.5/1.5
Valve's Conductance (Molecular Flow)	6 L/S	15 L/S	48 L/S	82 L/S	170 L/S	220 L/S	490 L/S	1090 L/S

General Angle Valves Ordering Information
通用角阀订购信息

66221 – 0100 – PL – 50 – FK – 10 – 02 – A 3 R

产品系列	
66221	通用真空角阀

尺寸规格	
0133	CF16
0075	KF16
0212	CF25
0100	KF25
0275	CF35
0150	KF40
0338	CF50
0200	KF50
0450	CF63
0250K	ISO63-K
0250F	ISO63-F
0250N	NW63
0462	CF80
0300K	ISO80-K
0300F	ISO80-F
0300N	NW80
0600	CF100
0400K	ISO100-K
0400F	ISO100-F
0400N	NW100
0675	CF130
0600K	ISO160-K
0600F	ISO160-F
0600N	NW160
0800	CF160
0800K	ISO200-K
0800F	ISO200-F
0800N	NW200
1000	CF200
1000K	ISO250-K
1000F	ISO250-F
1000N	NW250
1200	CF250
1200K	ISO320-K
1200F	ISO320-F
1200N	NW320

产品形式	
ML	手动90°
PL	气动90°
MY	手动Y型直线
PY	气动Y型直线
MZ	手动Z型
PZ	气动Z型
MT	手动三通
PT	气动三通

阀芯	
40	焊接波纹管 SUS316L
50	焊接波纹管AM350
10	挡板 无阀芯

密封圈材质	
FK	氟橡胶
FF	全氟醚橡胶

阀体材质	
10	SUS304
40	SUS316L

阀盖密封方式	
01	O-Ring
02	无氧铜

磁性开关		
代码	数量	检测位置
空白	不选装	-
A	带2个	阀开闭
B	带1个	阀开
C	带1个	阀闭

电磁阀	
空白	不选装
1	AC220V
2	AC110V
3	DC24V
4	DC12V

电磁阀方向	
L	法兰面左
R	法兰面右
O	法兰面里

说明

1、型号说明仅用于说明型号组成规则，有些组合实际并不存在；
如有疑问请联系迈格诺科销售代表

Vacuum Angle Valves

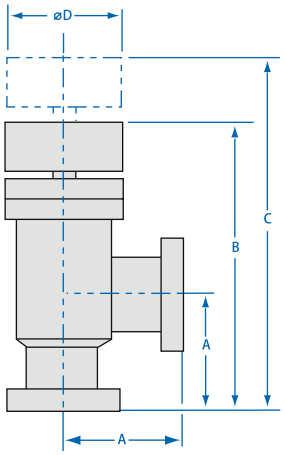

Manual Angle Valves,L-Type

Flange Size	Dimensions, (mm)			
	A	B	C	D
CF16	63.50	137.60	158.10	53.10
KF16	54.61	119.63	138.68	57.15
CF25	52.07	114.05	139.45	57.15
KF25	51.50	125.60	146.10	53.10
CF40	62.50	158.00	184.66	53.10
KF40	65.00	160.50	187.16	53.10
CF50	88.39	205.23	256.03	88.90
KF50	76.00	174.46	210.36	53.10
CF63	85.85	219.71	283.21	101.60
ISO63	82.50	210.75	254.75	60.00
CF80	89.66	227.58	303.78	114.30
ISO80	88.90	226.82	303.02	114.30
ISO100	114.00	248.90	323.40	60.00

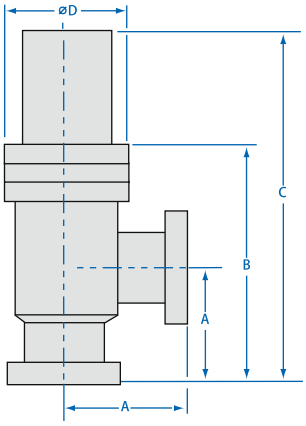

Pneumatic Angle Valves,L-Type

Flange Size	Dimensions, (mm)			
	A	B	C	D
CF16	63.50	117.20	164.20	57.00
KF16	55.00	108.70	155.70	57.00
CF25	52.07	114.05	157.23	57.15
KF25	51.50	105.00	152.00	57.00
CF40	62.50	126.50	189.50	76.00
KF40	65.00	128.50	192.50	76.00
CF50	88.39	205.23	291.08	88.90
KF50	76.00	146.00	232.00	85.00
CF63	85.85	219.71	266.19	101.60
ISO63	82.50	177.50	263.00	102.00
CF80	89.66	227.58	295.51	114.30
ISO80	88.90	226.82	285.75	114.30
CF100	118.36	253.75	391.92	165.10
ISO100	114.00	228.00	344.00	159.00

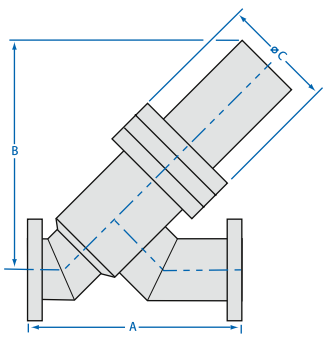

Pneumatic Inline Angle Valves, Y -Type

Flange Size	Dimensions, (mm)		
	A	B	C
CF16	119.38	112.82	57.00
KF16	101.60	109.73	57.15
CF25	107.44	108.46	57.15
KF25	106.68	108.46	57.15
CF35	133.00	142.84	76.00
KF40	130.00	142.94	76.20
CF35	181.61	201.68	88.90
KF50	177.80	181.89	85.00
CF63	215.90	194.06	101.60
ISO63	209.55	208.63	102.00
CF80	269.49	220.98	114.30
ISO80	267.97	220.98	114.30
ISO100	345.00	248.23	159.00

Vacuum Angle Valves

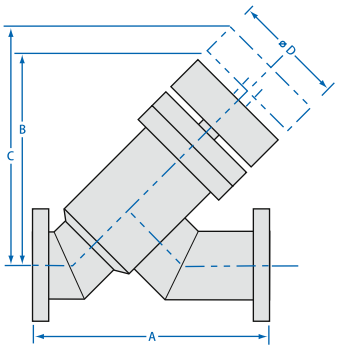

Manual Inline Angle Valves,Y-Type

Flange Size	Dimensions, (in.)			
	A	B	C	D
CF16	119.38	94.66	109.16	53.10
KF16	102.02	94.05	111.52	53.10
CF25	107.44	86.87	105.16	57.15
KF25	106.61	97.41	111.52	53.10
CF40	133.00	117.69	141.78	53.10
KF40	130.05	115.57	142.49	76.20
CF50	181.61	157.23	232.41	88.90
KF50	177.80	138.08	161.59	53.10
CF63	215.90	177.55	261.78	101.60
ISO63	209.55	158.66	194.77	60.00
CF80	269.49	195.83	289.05	114.30
ISO80	267.97	195.83	289.05	114.30
ISO100	345.00	203.90	256.58	60.00

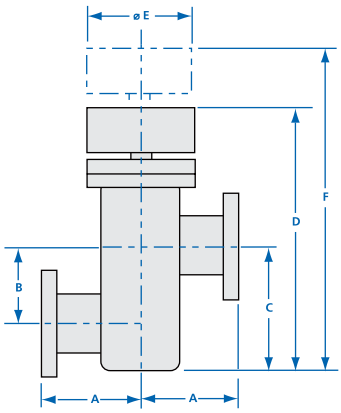

Manual Angle Valves,Z -Type

Flange Size	Dimensions, mm					
	A	B	C	D	E	F
CF16	63.50	28.00	47.00	113.00	57.00	132.00
KF16	54.60	28.50	47.50	125.90	53.10	146.40
CF25	52.10	35.00	57.00	119.00	57.00	145.00
KF25	51.50	34.90	57.20	132.62	53.10	153.12
CF40	63.50	48.00	79.00	166.00	76.00	204.00
KF40	61.00	47.80	79.30	179.69	53.10	206.35
CF50	88.40	67.00	105.00	222.00	89.00	273.00
KF50	86.30	66.50	104.62	203.46	85.00	239.46
CF63	85.90	79.00	125.00	259.00	102.00	323.00
ISO63	82.60	79.00	125.00	259.00	102.00	323.00
CF80	89.70	93.00	143.00	280.00	114.00	357.00
ISO80	88.90	93.00	143.00	280.00	114.00	357.00

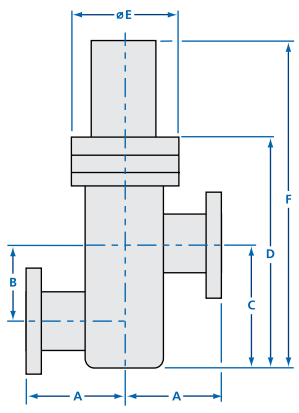

Pneumatic Angle Valves,Z - Type

Flange Size	Dimensions, mm					
	A	B	C	D	E	F
CF16	63.50	28.00	47.00	102.00	57.00	156.00
KF16	54.60	28.50	47.50	105.75	57.00	152.75
CF25	52.10	35.00	57.00	108.00	57.00	162.00
KF25	51.50	34.90	57.20	112.25	57.00	159.25
CF40	63.50	48.00	79.00	149.00	76.00	215.00
KF40	61.00	47.80	79.34	146.75	76.00	201.71
CF50	88.40	67.00	105.00	194.00	89.00	308.00
KF50	86.30	66.50	104.62	177.36	85.00	260.36
CF63	85.90	79.00	125.00	231.00	102.00	306.00
ISO63	82.60	79.00	125.00	231.00	102.00	306.00
CF80	89.70	93.00	143.00	253.00	114.00	340.00
ISO80	88.90	93.00	143.00	253.00	114.00	340.00
CF100	118.00	93.00	187.00	326.00	165.00	464.00
ISO100	114.00	93.00	187.00	326.00	165.00	464.00

Vacuum Angle Valves

MAGNOX

Manual Angle Valves,Tee - Type

Flange Size	Dimensions, mm			
	A	B	C	D
CF16	63.50	129.00	148.00	57.00
KF16	54.60	120.00	139.00	57.00
CF25	52.10	114.00	140.00	57.00
KF25	51.60	114.00	139.00	57.00
CF40	62.50	148.00	186.00	76.00
KF40	61.00	147.00	185.00	76.00
CF50	88.40	205.00	256.00	89.00
KF50	86.40	203.00	254.00	89.00
CF63	85.90	220.00	283.00	100.00
ISO63	82.60	216.00	280.00	100.00
CF80	89.70	228.00	304.00	114.00
ISO80	88.90	227.00	303.00	114.00

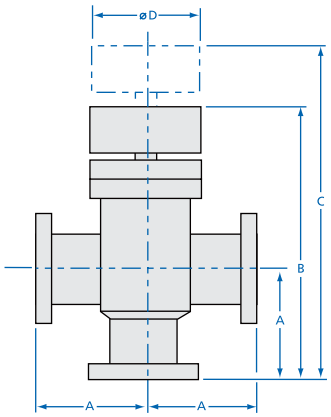

Pneumatic Angle Valves,Tee - Type

Flange Size	Dimensions, mm			
	A	B	C	D
CF16	63.50	117.00	172.00	57.00
KF16	54.60	108.00	163.00	57.00
CF25	52.10	102.00	157.00	57.00
KF25	51.60	102.00	157.00	57.00
CF40	62.20	132.00	197.00	76.00
KF40	61.00	130.00	196.00	76.00
CF50	88.40	177.00	291.00	89.00
KF50	86.40	175.00	289.00	89.0
CF63	85.90	192.00	266.00	100.00
ISO63	82.60	189.00	263.00	100.00
CF80	89.70	201.00	287.00	114.00
ISO80	88.90	200.00	286.00	114.00
CF100	118.00	254.00	392.00	165.00
ISO100	114.00	249.00	387.00	165.00

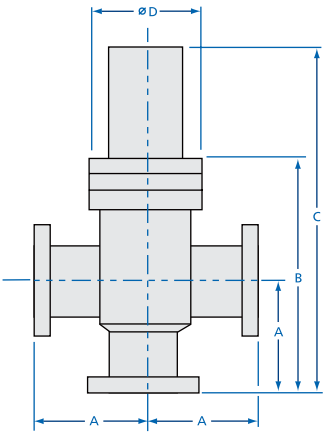



All-In-One Aluminum Block Angle Valve
一体式方形铝质挡板阀

Features

- **Uniform baking temperature**
  Excellent thermal conductivity results in a uniform temperature for the entire valve body and a marked decrease in the condensation of gases inside the valve.
- **Minimal outgassing**
  Low outgassing makes it possible to use a lower capacity pump and also shorten exhaust time.
- **High corrosion resistance to fluorine gas**
- **Lightweight, Compact**
  Large conductance, small body, excellent resistance against fluorine corrosion (body)
- **Minimal contamination from heavy metals**
  The valve does not contain heavy metals such as Ni (nickel) or Cr (chrome) and it's low sputtering yield also helps to minimize the heavy metal contamination of semiconductor wafers.
- **The bellows assembly can be replaced, which reduces maintenance costs and waste materials.**

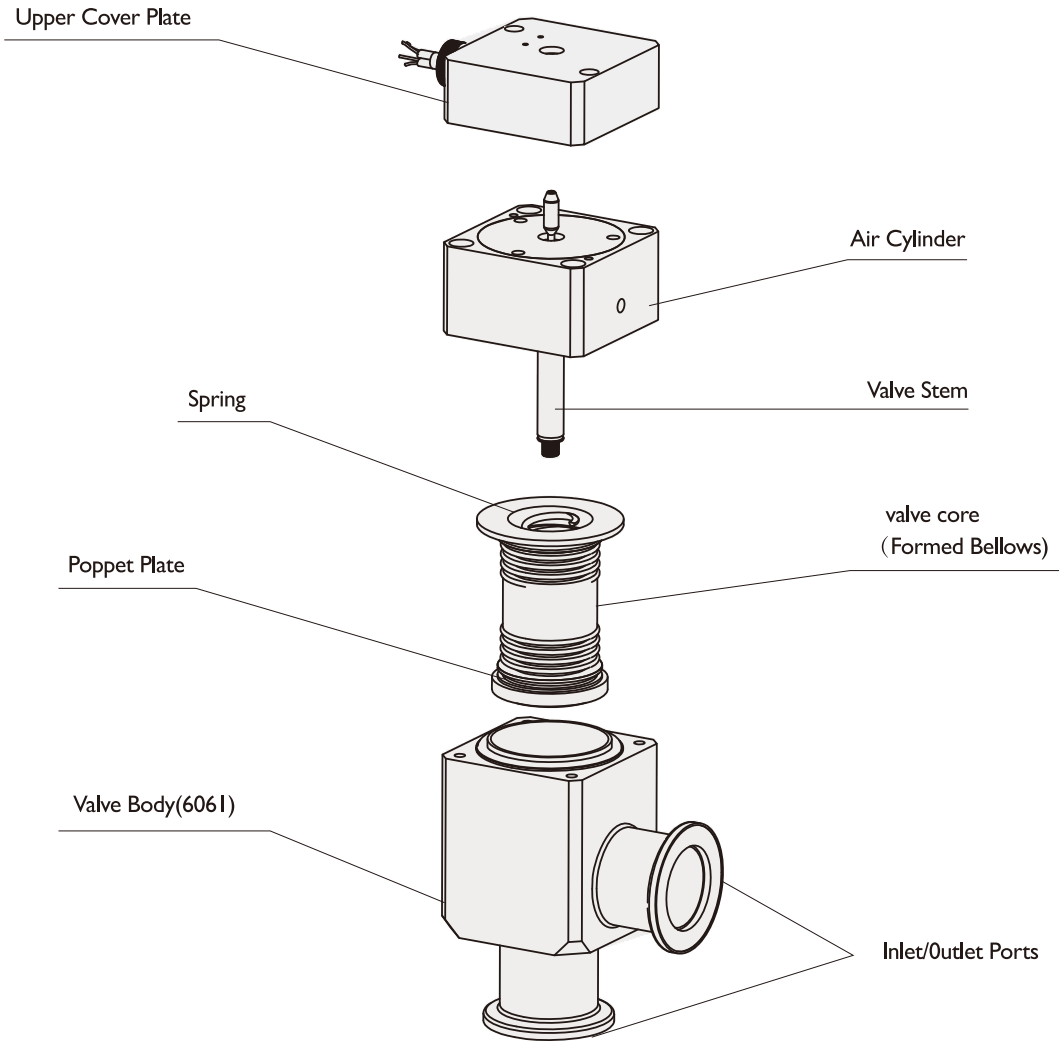

Technical Data For All-In-One Angle Valves
一体式挡板阀技术参数

Flange Size		KF16	KF25	KF40	KF50	KF63	KF80
Valve type		Normally closed (Pressurize to open, Spring seal)					
Fluid		Inert gas under vacuum					
Operating temperature [°C]		5 to 150					
Operating pressure [Pa(abs)]		1×10^{-5} to atmospheric pressure					
Conductance [L/s]*1		5	14	45	80	160	200
Leakage [Pa . m³/s]	Internal	For standard seal material (FKM) 1.3×10^{-11} at normal temperature, excluding gas permeation					
	External	For standard seal material (FKM) 1.3×10^{-11} at normal temperature, excluding gas permeation					
Flange type		KF (NW)				KF(NW),ISO-K	
Principal materials		Body: Aluminum alloy, Bellows: &tainless steel 316L, Chief part: Stainless steel, FKM (Standard seal material)					
Surface treatment		Externa: Hard anodized Intemal: Raw material					
Pilot pressure [MPa(G)]		0.4 to 0.7					
Cycle Life(Valve Core)		>3500000					

All-In-One Angle Valves Ordering Information
一体式挡板阀订购信息

66222 — 0150 PL 1 10 — 3 2 1 — C

产品系列	
66222	一体成型角阀

产品代码	
0075	KF16
0100	KF25
0150	KF40
0200	KF50
0250K	ISO63-K
0250N	NW63
0300K	ISO80-K
0300N	NW80

产品形式	
ML	手动90°角阀
PL	气动90°角阀
MY	手动Y型直线角阀
PY	气动Y型直线角阀

阀芯	
1	成型波纹管阀芯
2	挡板密封
3	软启动阀芯

阀体材质	
AL	6061
10	SUS304
40	SUS316L

电磁阀	
空白	不选装
1	AC220V
2	AC110V
3	DC24V
4	DC12V

电磁阀方向	
1	法兰侧
2	法兰面左
3	法兰面右
4	法兰面里

加热器选配	
Blank	不选配
1	选配2片
2	选配3片
3	选配6片

装配环境	
	普通
C	洁净间

说明

1、型号说明仅用于说明型号组成规则，有些组合实际并不存在；
如有疑问请联系迈格诺科销售代表

Vacuum Angle Valves

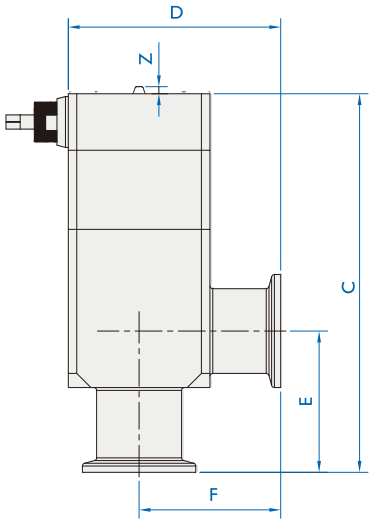

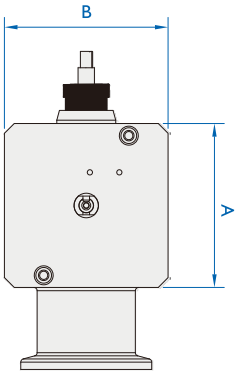

Pneumatic All-In-One Angle Valves

Part Number	Flange Size	Dimensions, mm						
		A	B	C	D	E	F	Z
66222-0075-PL	KF16	42.00	42.00	113.00	61.00	40.00	40.00	32.20
66222-0100-PL	KF25	52.00	52.00	136.20	78.00	50.00	50.00	32.20
66222-0150-PL	KF40	65.00	65.00	161.50	97.50	65.00	65.00	32.20
66222-0200-PL	KF50	78.00	78.00	189.00	109.00	70.00	70.00	32.20

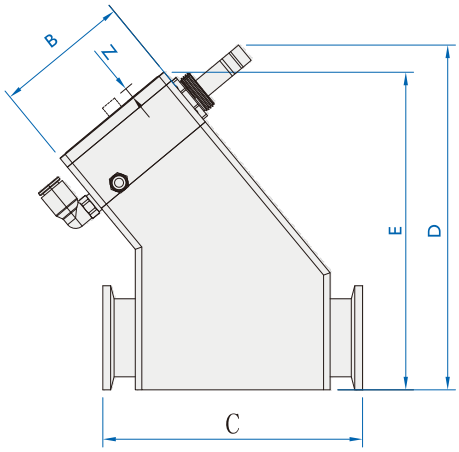

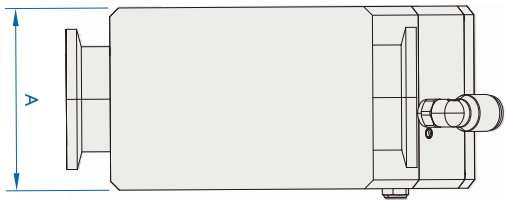

Pneumatic All-In-One Inline Valves

Part Number	Flange Size	Dimensions, mm					
		A	B	C	D	E	Z
66222-0075-PY	KF16	42.00	42.00	80.00	114.00	104.00	32.20
66222-0100-PY	KF25	52.00	52.00	100.00	136.00	122.00	32.20
66222-0150-PY	KF40	65.00	65.00	130.00	162.50	148.00	32.20
66222-0200-PY	KF50	78.00	78.00	178.00	198.00	186.00	32.20

Vacuum Angle Valves

Applications
应用场景

To achieve a soft pumpdown of your vacuum system with limited space conditions, MAGNOX recommends the Two-Stage Valve. A low-profile isolation valve with an integrated small bypass valve, the Two-Stage Valve significantly simplifies system setup and reduces costs. The Two-Stage Valve is best suited for high vacuum applications, specifically semiconductor or optical processing for which a cleaner environment is necessary. With the integrated slow pumpdown feature, turbulent flow is diminished, reducing particle contamination and damage to the product.

The Two-Stage Valve soft starts the system in two easy steps without the use of secondary bypass lines, which clog easily and are expensive to maintain. In the first stage, the bypass valve pumps down slowly from atmospheric pressure to a vacuum pressure specified by the end-user. In the second stage, the main valve opens, allowing use of full pumping speed. The main valve is smaller, lighter, and lower in cost than similar competitive valves while offering improved reliability and increased uptime. The square cap design is easy to assemble and maintain.

Features
产品特性

- Compact design
- Provides soft pumpdown and isolation of your vacuum system
- Reduces particulate contamination during early turbulent pumpdown
- Adjustable conductance for variable pumpdown speed
- Eliminates the need for small bypass lines thatclog easily
- Bellows-sealed poppet valves
- Bellows are formed for less particle trapping and a longer cycle life
- Angle or inline option
- Available in port diameters of 1, 1½ , and 2inches
- Choice of KF flanges, CF flanges, or weldstubs
- May easily be accommodated into existing systems

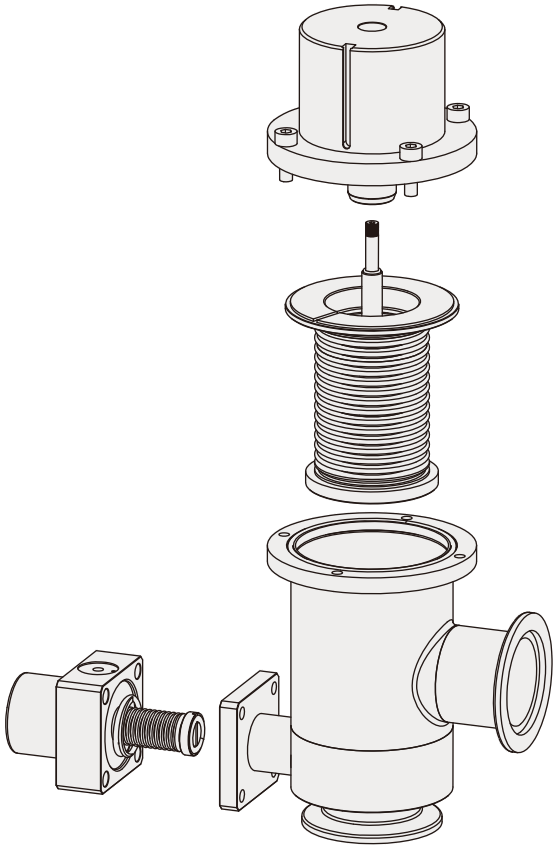

Vacuum Angle Valves

MAGNOX

Item Type	Technical Data			
Material	Body	SUS304/SUS316L		
	Cylinder Assembly	AL		
	Valve Core	SUS316(Formed Bellows)		
	O-Ring	FKM/FFKM		
Cycle Life	≥3500000			
Leakage Rate	HV	< $2x10^{-9}$ mbar.l /sec for O-ring sea		
	UHV	$5x10^{-10}$ mbar. l /sec for gasket seal		
Bake Temperature	Valve body	< 150°C		
	Manual and pneumatic actuator	< 80°C		
Pressure Range (mbar)	HV	$1x10^{-8}$~1000		
Leakage Rate	UHV	$1x10^{-10}$~1000		
Standard Seal	HV	Gate	Viton O-ring	
		Bonnet		
	UHV	Gate	Viton O-ring	
		Bonnet	Copper Gasket	
Actuator	Pneumatic			
Operating Air Pressure	Φ6 mm,4-6.5 Kg/cm'(overpressure)			
Actuation Time	Main: 40 - 160 msec to open, 90 - 220 msec to close, depending on configuration Bypass: 100 msec (both)			
Options	A. Position indicator; B. Pneumatic control solenoid valve; C. Roughing port; D. Other material Gate O-ring seal;			
Maximum Differential Pressureagainst Gate	< 1090 mbar			
Flange Size	KF25/CF25	KF40/CF35	KF50/CF50	ISO63/CF63
Maximum Differential Pressure At Opening	2000 mbar			
Maximum Differential Pressure against Gate	2700	2400	2300	2000
Pneumatic Valve Open & Close Time /S	0.3/0.5	0.3/0.5	0.5/0.8	0.5/0.8
Valve's Conductance (Molecular Flow)	14L/S	45L/S	80L/S	160L/S

Two-Stage Angle Valves Ordering Information
双级角阀订购信息

66223 – 0150 – PL FK 40 – 1 3 A

产品系列	
66223	双级角阀系列

尺寸规格	
0100	KF25
0150	KF40
0200	KF50
0250K	ISO63-K
0300K	ISO80-K
0400K	ISO100-K
0600K	ISO160-K

产品形式	
PL	手动90°直角型
PY	气动180°直线型（Y型）
PZ	气动Z型
PT	气动三通型

密封圈材质	
FK	氟橡胶
FF	全氟醚橡胶

阀体材质	
10	SUS304
40	SUS316L

软抽阀	
Blank	不选装
1	选装

电磁阀	
Blank	不选装
1	AC220V
2	AC110V
3	DC24V
4	DC12V

磁性开关		
代码	数量	检测位置
空白	不选装	-
A	带2个	阀开闭
B	带1个	阀开
C	带1个	阀闭

说明

1、型号说明仅用于说明型号组成规则，有些组合实际并不存在；
如有疑问请联系迈格诺科销售代表

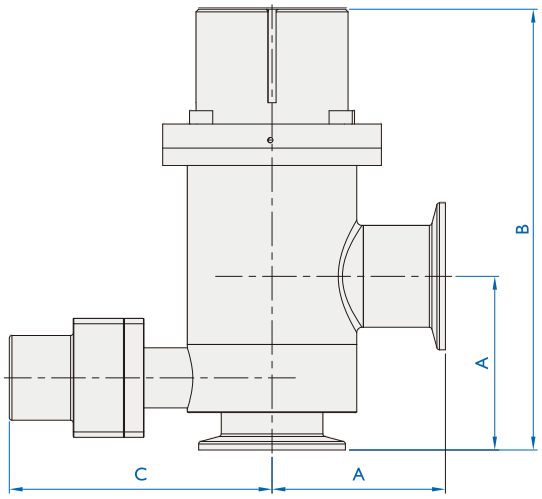

Manual Viton Seal Tee Valves

Part Number	Flange Size	Dimensions, mm		
		A	B	C
66223-0100	KF25	51.00	154.00	94.00
66223-0150	KF40	65.00	165.00	99.00
66223-0200	KF50	70.00	212.00	107.00

Product Description
产品描述

MAGNOX butterfly valves require only one-quarter turn rotation of the handle to go from fully open to the fully closed position. In the CF and KF flange series, a spring loaded ball bearing becomes seated in an indent providing a positive mechanical stop. All other size valves employ a roll pin stop method.

These quick-acting butterfly valves feature an improved sealing action. The opening in the body of the valve has been machined at a slight angle to the plane of the flapper. The flapper is set to rotate slightly off-centre. On closure, this causes the sealing pressure to be applied more uniformly all around the O-ring. A reliable, positive seal is made and the tendency of previous designs to roughen the surface of the O-ring and eject it from its groove is eliminated.

MAGNOX butterfly valves are low outgassing. All internal surfaces are machined from solid stainless steel bar stock. The handle is made of aluminium. A small O-ring on the stem prevents shaft leakage.

The valves are offered with a choice of CF ultrahigh vacuum metal-seal flanges or ISO KF O-ring seal flanges.

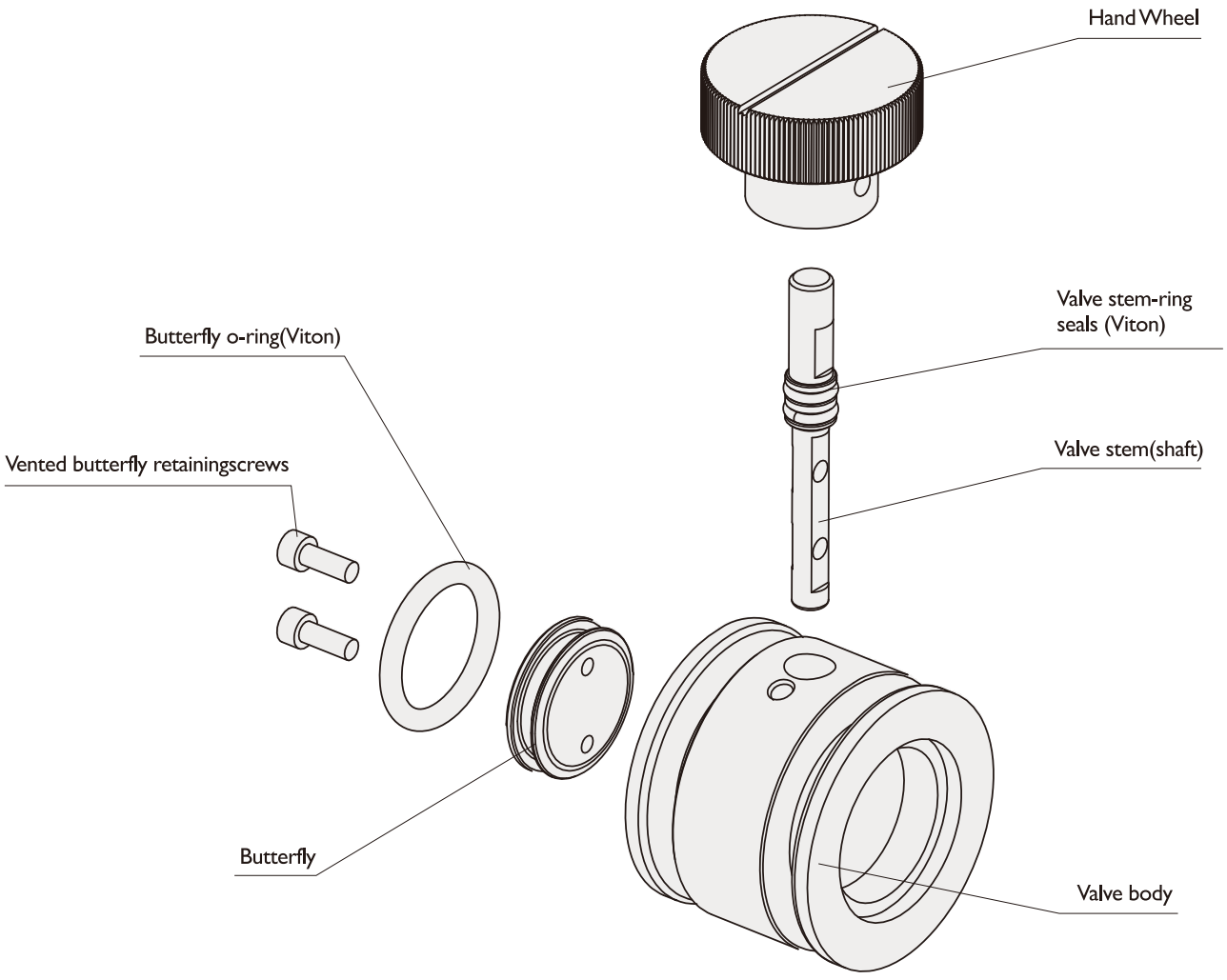

Vacuum Butterfly Valves

MAGNOX

Specifications

- Port OD:3/4 to 2 inches
- Materials:

  Body:304 stainless steel

  Knob:Aluminum

  Portsea:FKM
- Actuation: Manualusing knurled knob
- Temperature range:

  Sustained:s150°C;

  Intermittent:s204°C
- Vacuumrane:

  FKM O-ring:≥1x10^{-9} Torr-High vacuum



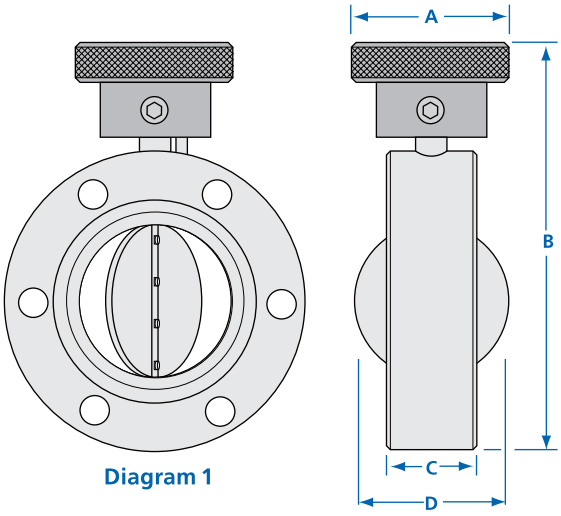

Diagram 1

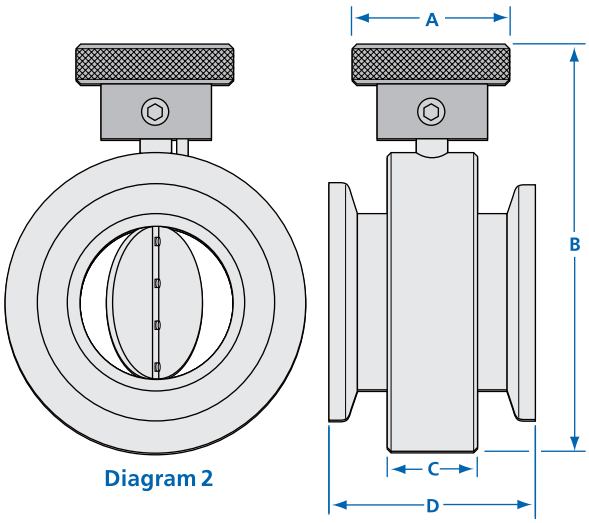

Diagram 2

Manual Butterfly Valves						
Part Number	Dimensions, mm					
	Diagram	Flange Type	A	B	C	D
66209-0133	1	CF 16	19.00	47.80	19.10	19.10
66209-0075	2	NW 16	19.00	47.80	17.50	37.80
66209-0212	1	CF 25	19.00	70.00	25.00	-
66209-0100	2	NW 25	22.00	15.80	15.80	31.80
66209-0275	1	CF 35	35.00	32.00	32.00	34.30
66209-0150	2	NW 40	35.00	19.00	19.00	34.00
66209-0338	1	CF 50	38.00	124.00	25.00	-
66209-0200	2	NW 50	39.00	22.70	22.70	42.70

Vacuum Ball Valves Ordering Information
真空球阀订购信息

66210	–	0150	–	P	–	FK	–	40	–	NC	–	3

产品系列	
66210	铸造三片式球阀
66211	NC机械加工三片式

尺寸规格	
0075	KF16
0100	KF25
0150	KF40
0200	KF50
0250K	ISO63-K
0250N	NW63
0300K	ISO80-K
0300N	NW80
0400K	ISO100-K
0400N	NW100
TW	Butt Weld

驱动形式	
M	手动
P	气动

密封圈材质	
FK	氟橡胶
FF	全氟醚橡胶

阀体材质	
10	SUS304
40	SUS316L

执行器状态	
NO	常开
NC	常闭

电磁阀	
Blank	No So lenoid
1	AC220V
2	AC110V
3	DC24V
4	DC12V

说明

1、型号说明仅用于说明型号组成规则，有些组合实际并不存在；
如有疑问请联系迈格诺科销售代表

Vacuum Ball Valves

MAGNOX

Specifications

- Flange: KF(NW)
- Operation: 1/4 Turn manual open and close
- Fittngs: N/A
- Sensors: N/A
- Wetted materials: SS316,Viton,PTFE
- Leak rate mbar-L/sec: $9.0*10^{-9}$
- Max pressure: 56.8 PSI
- Pneumatic supply: N/A
- Operation time: N/A
- Operating temperature: 150°C

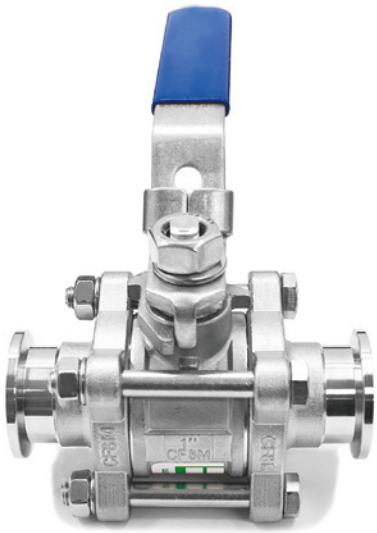

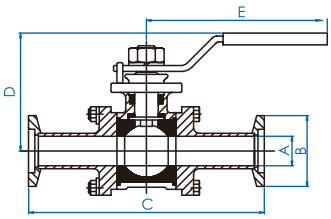

Casting Manual Ball Valve

Part Number	Flange Size	Dimensions, mm				
		A	B	C	D	E
66210-0075-M	KF16	15.70	30.00	91.80	63.21	135.41
66210-0100-M	KF25	22.10	40.00	110.00	67.00	123.50
66210-0150-M	KF40	34.80	55.00	138.50	93.50	155.90
66210-0200-M	KF50	47.50	75.00	146.00	110.00	161.10

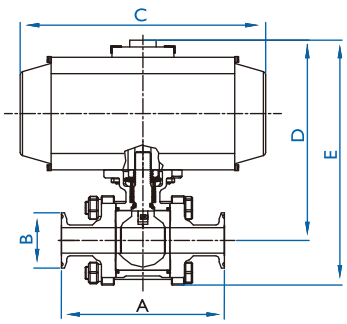

Casting Pneumatic Ball Valves

Part Number	Flange Size	Dimensions, mm				
		A	B	C	D	E
66210-0075-P	KF16	92.00	30.00	147.00	136.00	164.00
66210-0100-P	KF25	107.00	40.00	147.00	145.00	174.00
66210-0150-P	KF40	130.00	55.00	168.00	173.00	213.00
66210-0200-P	KF50	151.00	75.00	184.00	195.00	243.00

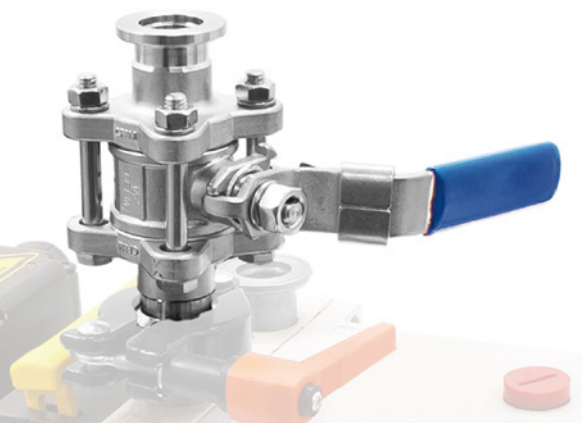

Ball Valves Specially For Harsh Coating Processes

Specifications

Vacuum and temperature ratings

- Vacuum rated to 1 X 10^{-8} Torr
- Helium leak rated less than 1 X 10^{-9} std. cc/sec
- Standard fuoroelastomer seal (Viton®): -26°C to 205°C

Materials:

- Valve body, ball, stem, and end caps: machined from solid 316L stainless steel
- Standard seal: fuoroelastomer (Viton®).
- Seats: PTFE Tefon®
- Lubricant: Dow Corning® High Vacuum Grease

Features

General

- Straight-through, unimpeded fow
- Higher conductance than a comparable poppet valve
- Poppet less design has less wetted surface
- 1/4 turn, quick actuation
- "Self-cleaning"action prevents deposition buildup
- Valves can be easily serviced with Magnox's standard maintenance kits

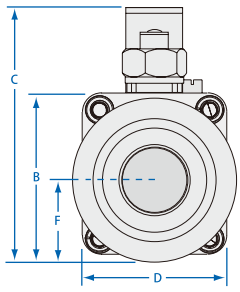

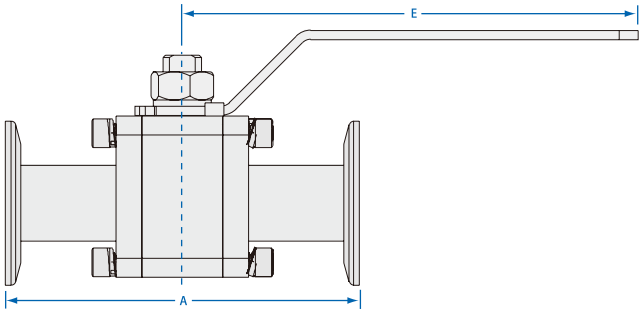

CNC Manual Ball Valve

Part Number	Flange Size	Dimensions, mm					
		A	B	C	D	E	F
66211-0075-M	KF16	88.00	47.00	75.00	47.00	147.00	24.00
66211-0100-M	KF25	100.00	47.00	75.00	47.00	147.00	24.00
66211-0150-M	KF40	118.00	54.00	85.00	48.00	157.00	25.00
66211-0200-M	KF50	126.00	85.00	116.00	85.00	183.00	25.00

Call for information on larger sizes.

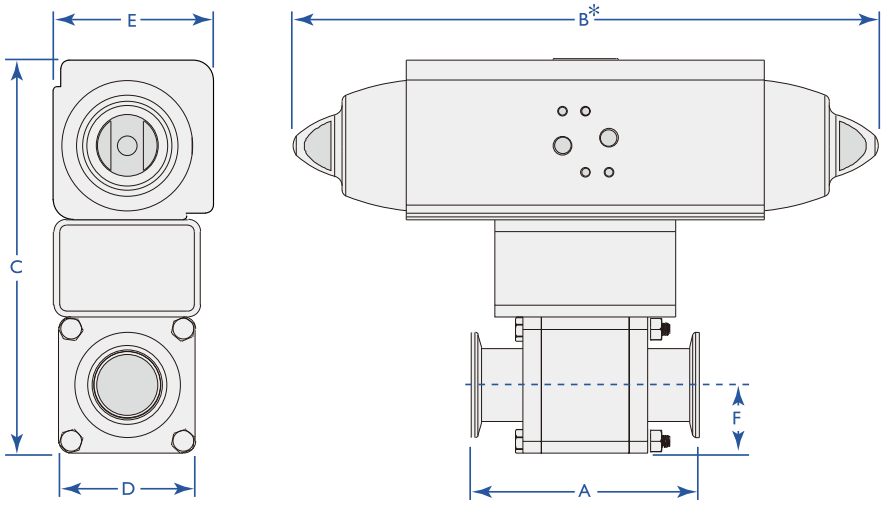

CNC Pneumatic Ball Valve

Part Number	Flange Size	Dimensions, mm					
		A	B	C	D	E	F
66211-0075-P	KF16	88.10	259.00	168.00	47.00	70.00	24.00
66211-0100-P	KF25	99.80	259.00	175.00	48.00	70.00	25.00
66211-0150-P	KF40	118.40	259.00	175.00	48.00	70.00	25.00
66211-0200-P	KF50	126.20	259.00	192.00	71.00	70.00	36.00

Call for information on larger sizes.

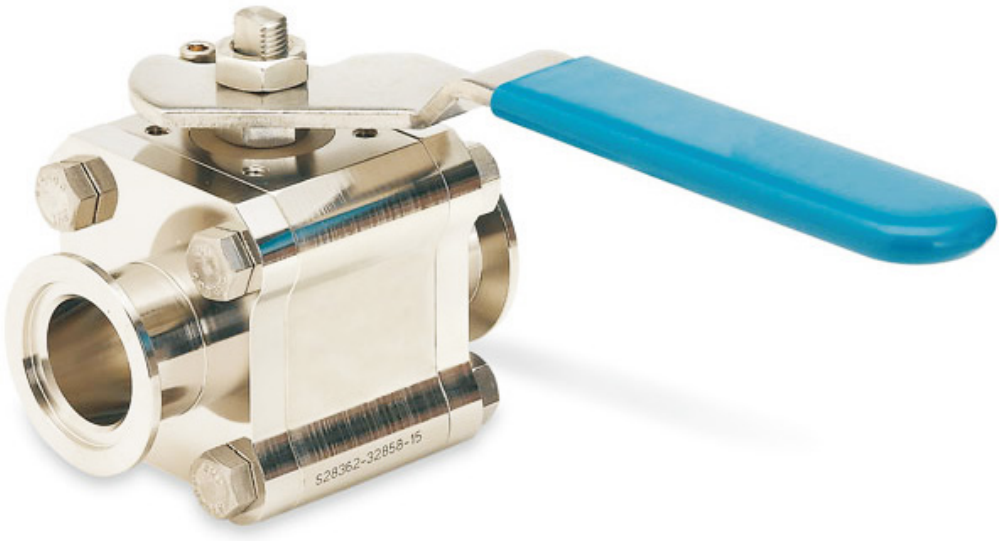

General Vacuum Gate Valves
通用真空闸阀

Valves handle applications in semiconductor and other processing, and are used most often to isolate pumps and sample entry locks from HV or UHV work chambers.

Features

- General purpose Electro polished Stainless Steel
- Provide high conductance with in a compact design
- Shock-free operation with minimum vibration
- 100,000-cycle service before requiring maintenance
- Available in manual or pneumatic operation
- Pneumatic valves close or remain closed in the event of power loss or loss of air pressure
- All pneumatic 1.5" flange O.D. and larger models in corporatemagnetic REED switches for position indication
- Pneumatic valves feature a 24VDC solenoid operator at no extra charge (other voltages, both AC and DC, available on request)

NOTE: For ease of maintenance, the carriage assembly can be removed from the body without requiring removal of the valve from the system.

NOTE: Please contact us for options such as roughing ports or valves that remain open in the event of power failure.

Roughing port

With the exception of the DN16 gate valve, all valves can be fitted with roughing ports. Valves with CF port flanges are supplied with CF roughing port flanges. Flush mounted roughing port flanges have tapped bolt holes, but those with tubular extensions have drilled through bolt holes. Gate valves fitted with ISO KF and ISO LF port flanges are supplied with ISO KF roughing port fanges. Roughing ports will be installed on the side opposite the gate seal (the carriage side of the valve). Although the location of the roughing port does not affect its function, the positioning of the gate is important.

A roughing port provides a path to a vacuum chamber through the gate valve body. With the gate closed, the valve body and chamber may be evacuated by a vacuum roughing pump.

Typical installation

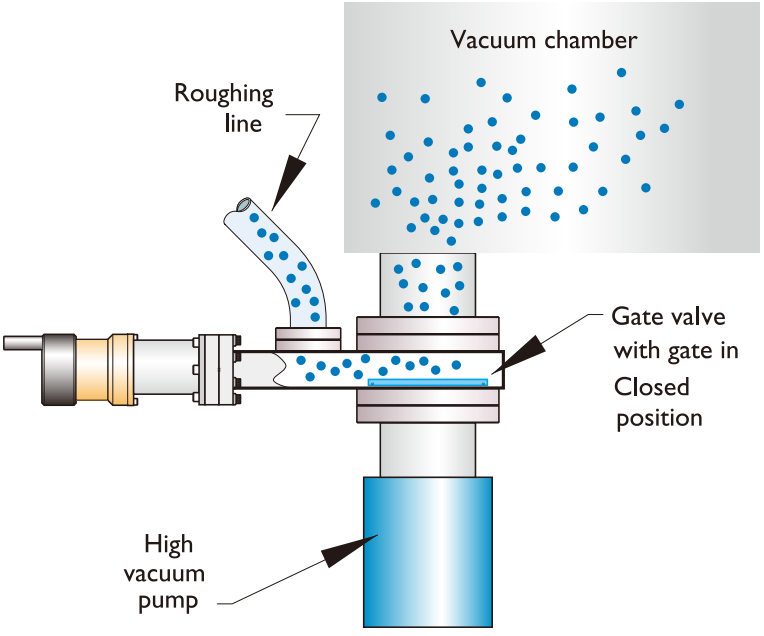

Ball Groove Mechanism
滚珠式闸阀

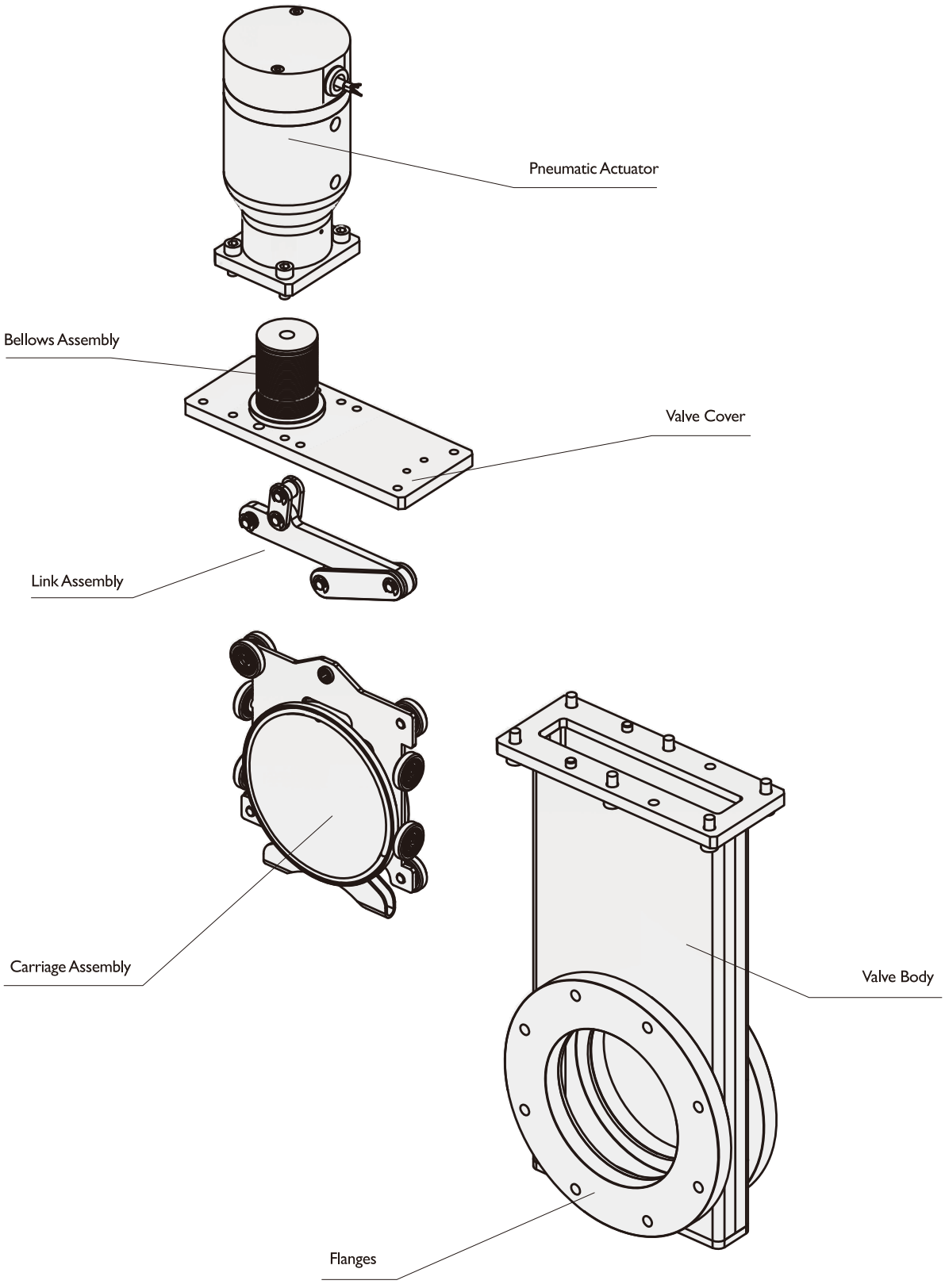

Linkage Mechanism
联动式闸阀

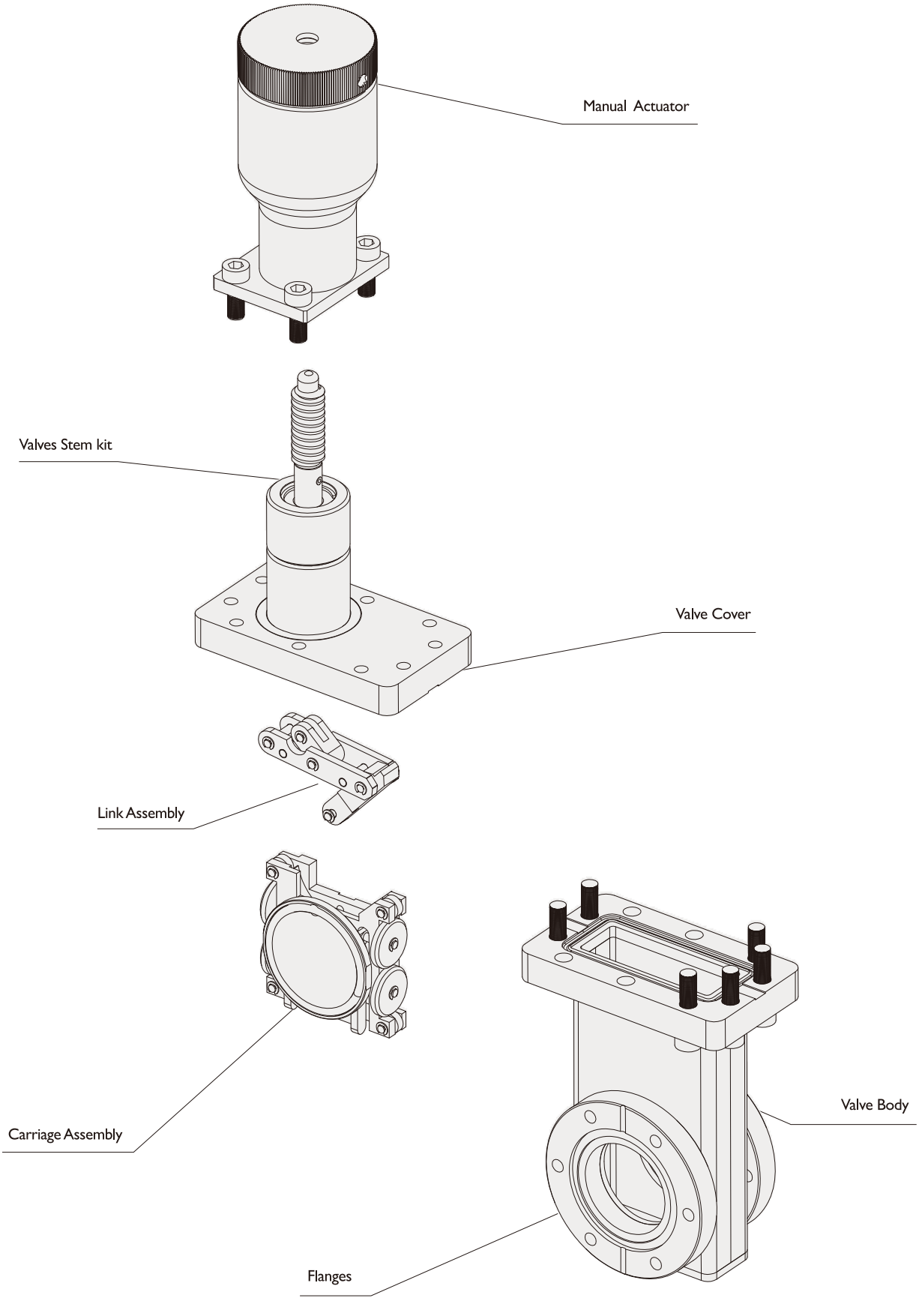

Technical Data For General Vacuum Gate Valves
通用真空闸阀技术参数

Item Type	Technical Data			
Material	Body			SUS304
	Cariage			SUS304
	Gate			SUS304
	Bellows			AM350
Cycle Life	HV	size under 4"(HV)		100,000
		size above 4"(HV)		50,000
	UHV	size under 4"(UHV)		100,000
		size above 4"(UHV)		50,000
Leakage Rate	HV	< $2x10^{-9}$ mbar.l /sec for O-ring sea		
	UHV	$5x10^{-10}$ mbar. l /sec for gasket seal		
Bake Temperature	Valve body			< 150°C
	Manual and pneumatic actuator			< 80°C
Pressure Range (mbar)	HV	$1x10^{-8}$~1000		
Leakage Rate	UHV	$1x10^{-10}$~1000		
Standard Seal	HV	Gate		Viton O-ring
		Bonnet		
	UHV	Gate		Viton O-ring
		Bonnet		Copper Gasket
Actuator	Pneumatic or Manual			
Operating Air Pressure	Φ6 mm,4-6.5 Kg/cm'(overpressure)			
Surface Treatment	Electrochemical Polishing			
Options	A. Position indicator; B. Pneumatic control solenoid valve; C. Roughing port; D. Other material Gate O-ring seal;			
Maximum Differential Pressureagainst Gate	＜1090 mbar			
Maximum Differential Pressure At Opening	ISO100	ISO160	ISO200	ISO250
	＜30 mbar	＜25 mbar	＜20 mbar	＜25 mbar
Pneumatic Valve Open & Close Time /S	ISO100	ISO160	ISO200	ISO250
	3/S	4/S	5/S	7/S
Valve's Conductance (Molecular Flow)	ISO100	ISO160	ISO200	ISO250
	1700 L/S	5100 L/S	12000 L/S	22000 L/S

General Vacuum Gate Valves Ordering Information
通用真空闸板阀订购信息

66225	–	0400F	–	P	–	FK	–	I0	–	01	–	3

产品系列	
66224	连杆结构闸阀
66225	滚珠结构闸阀

尺寸规格	
0133	CF16
0075	KF16
0212	CF25
0100	KF25
0275	CF35
0150	KF40
0338	CF50
0200	KF50
0450	CF63
0250K	ISO63-K
0250F	ISO63-F
0250N	NW63
0462	CF80
0300K	ISO80-K
0300F	ISO80-F
0300N	NW80
0600	CF100
0400K	ISO100-K
0400F	ISO100-F
0400N	NW100
0675	CF130
0600K	ISO160-K
0600F	ISO160-F
0600N	NW160
0800	CF160
0800K	ISO200-K
0800F	ISO200-F
0800N	NW200
1000	CF200
1000K	ISO250-K
1000F	ISO250-F
1000N	NW250
1200	CF250

驱动方式	
M	手动
P	气动

密封圈材质	
FK	氟橡胶
FF	全氟醚橡胶

阀体材质	
I0	SUS304
40	SUS316L

阀盖密封方式	
01	O-Ring
02	无氧铜

电磁阀	
Blank	不选装
1	AC220V
2	AC110V
3	DC24V
4	DC12V

说明

1、型号说明仅用于说明型号组成规则，有些组合实际并不存在；如有疑问请联系迈格诺科销售代表。

KF&CF Flange Gate Valve With Linkage Mechanism

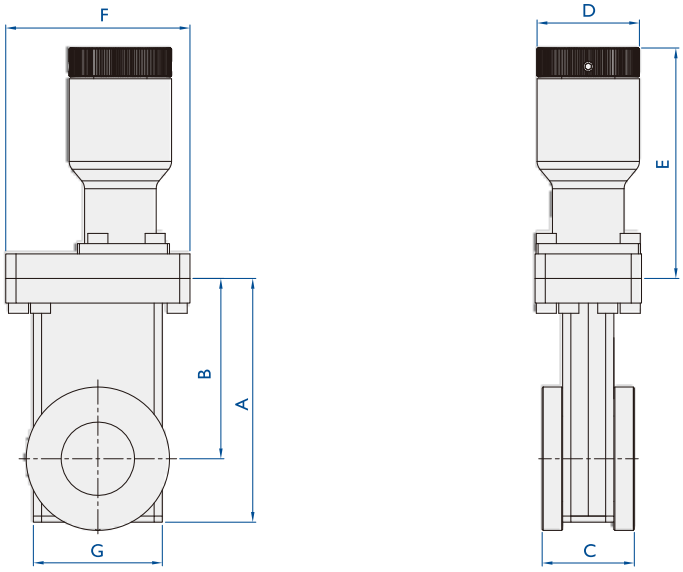

Manual Actuation

Part Number	Flange Size	Dimensions, mm						
		A	B	C	D	E	F	G
66224-0150-M	KF40	119.00	88.00	50.6	50.00	92.00	88.00	63.0
66224-0275-M	CF35	119.00	88.00	45.4	50.00	92.00	90.00	63.0
66224-0200-M	KF50	167.00	123.00	59.00	50.00	92.00	123.00	81.0
66224-0338-M	CF50	167.00	123.00	56.00	50.00	92.00	104.00	81.0

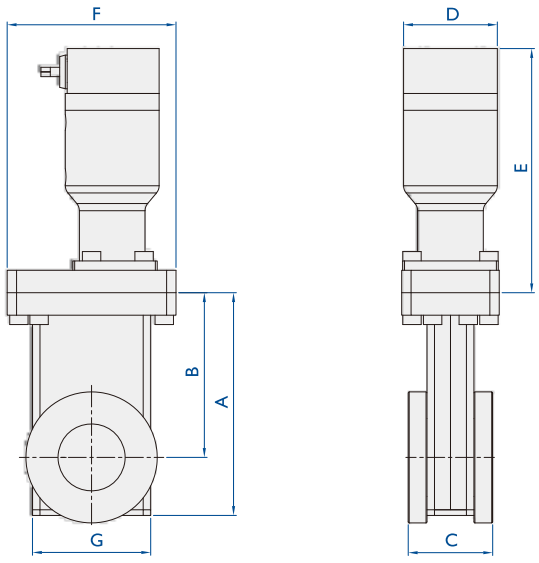

Pneumatic Actuation

Part Number	Flange Size	Dimensions, mm						
		A	B	C	D	E	F	G
66224-0150-P	KF40	119.00	88.00	50.6	50.00	134.00	88.00	63.0
66224-0275-P	CF35	119.00	88.00	45.4	50.00	134.00	90.00	63.0
66224-0200-P	KF50	167.00	123.00	59.00	50.00	134.00	123.00	81.0
66224-0338-P	CF50	167.00	123.00	56.00	50.00	134.00	104.00	81.0

ISO&CF Flange Gate Valve With Ball Groove Mechanism

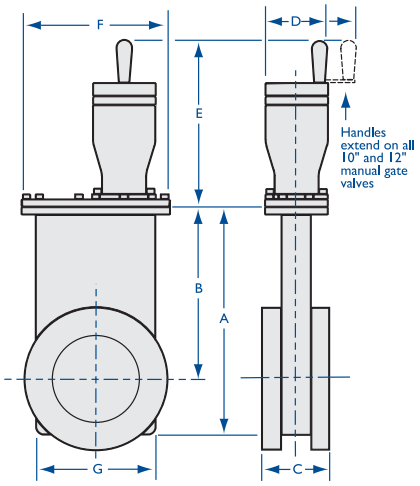

Manual Actuation

Part Number	Flange Size	Dimensions, mm						
		A	B	C	D	E	F	G
66225-0450-M	CF 63	207.00	158.00	65.00	50.00	134.00	158.00	107.00
66225-0250F-M	ISO-63-F	207.00	158.00	53.00	50.00	134.00	128.00	107.00
66225-0250K-M	ISO-63-K	207.00	158.00	89.30	50.00	134.00	128.00	107.00
66225-0600-M	CF 100	297.00	222.00	69.60	79.00	177.00	222.00	146.00
66225-0400F-M	ISO-100-F	297.00	222.00	53.60	79.00	177.00	170.00	146.00
66225-0400K-M	ISO-100-K	297.00	222.00	100.40	79.00	177.00	170.00	146.00
66225-0800-M	CF 160	407.00	306.50	79.00	79.00	177.00	306.50	204.00
66225-0600F-M	ISO-160-F	407.00	306.50	67.00	79.00	177.00	220.00	204.00
66225-0600K-M	ISO-160-K	407.00	306.50	100.40	79.00	177.00	220.00	204.00
66225-1000-M	CF 200	506.00	382.00	84.40	79.00	177.00	382.00	245.00
66225-0800F-M	ISO-200-F	507.00	383.00	67.00	79.00	177.00	267.00	245.00
66225-0800K-M	ISO-200-K	507.00	383.00	108.00	79.00	177.00	267.00	245.00

注：如有更大尺寸或非标定制需求，请联系迈格诺科销售代表。

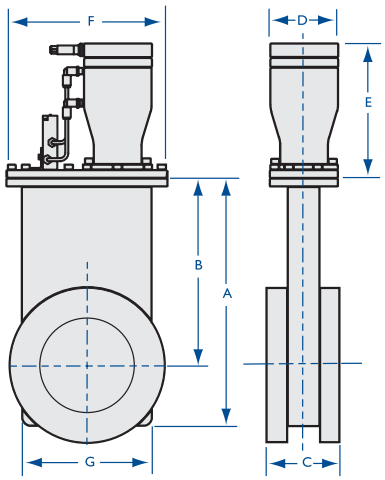

Pneumatic Actuation

Part Number	Flange Size	Dimensions, mm						
		A	B	C	D	E	F	G
66225-0450-P	CF 63	207.00	158.00	65.00	60.00	134.00	143.00	107.00
66225-0250F-P	ISO-63-F	207.00	158.00	53.00	62.00	134.00	128.00	107.00
66225-0250K-P	ISO-63-K	207.00	158.00	89.30	62.00	134.00	128.00	107.00
66225-0600-P	CF 100	297.00	222.00	69.60	75.00	177.00	182.00	146.00
66225-0400F-P	ISO-100-F	297.00	222.00	53.60	75.00	177.00	170.00	146.00
66225-0400K-P	ISO-100-K	297.00	222.00	100.40	75.00	177.00	170.00	146.00
66225-0800-P	CF 160	407.00	306.50	79.00	75.00	177.00	238.00	204.00
66225-0600F-P	ISO-160-F	407.00	306.50	67.00	75.00	177.00	220.00	204.00
66225-0600K-P	ISO-160-K	407.00	306.50	100.40	75.00	177.00	220.00	204.00
66225-1000-P	CF 200	506.00	382.00	84.40	75.00	177.00	282.00	245.00
66225-0800F-P	ISO-200-F	507.00	383.00	67.00	75.00	177.00	267.00	245.00
66225-0800K-P	ISO-200-K	507.00	383.00	108.00	75.00	177.00	267.00	245.00

注：如有更大尺寸或非标定制需求，请联系迈格诺科销售代表。

Aluminum Gate Valves
铝合金真空闸阀

With a robust design and direct mounting option, as well as reduced and easy maintenance due to its split body, Easily meets all standard requirements. Various design options in actuation, flange connections or additional vacuum ports make it easy to integrate in any vacuum application.

Standard options for flange connectors are ISO-F . Customer-specific flanges can be integrated, as well as special features, e. g. a shutter for laser applications (as gate without seal).

The standard gate sealing is provided by an O-ring seal in FKM and other sealing materials are available on request.

Features:

- Reliable, proven design
- Mechanically locked in closing position
- Reliable performance
- Low cost of ownership
- Free of lubricants
- Split body for easy cleaning

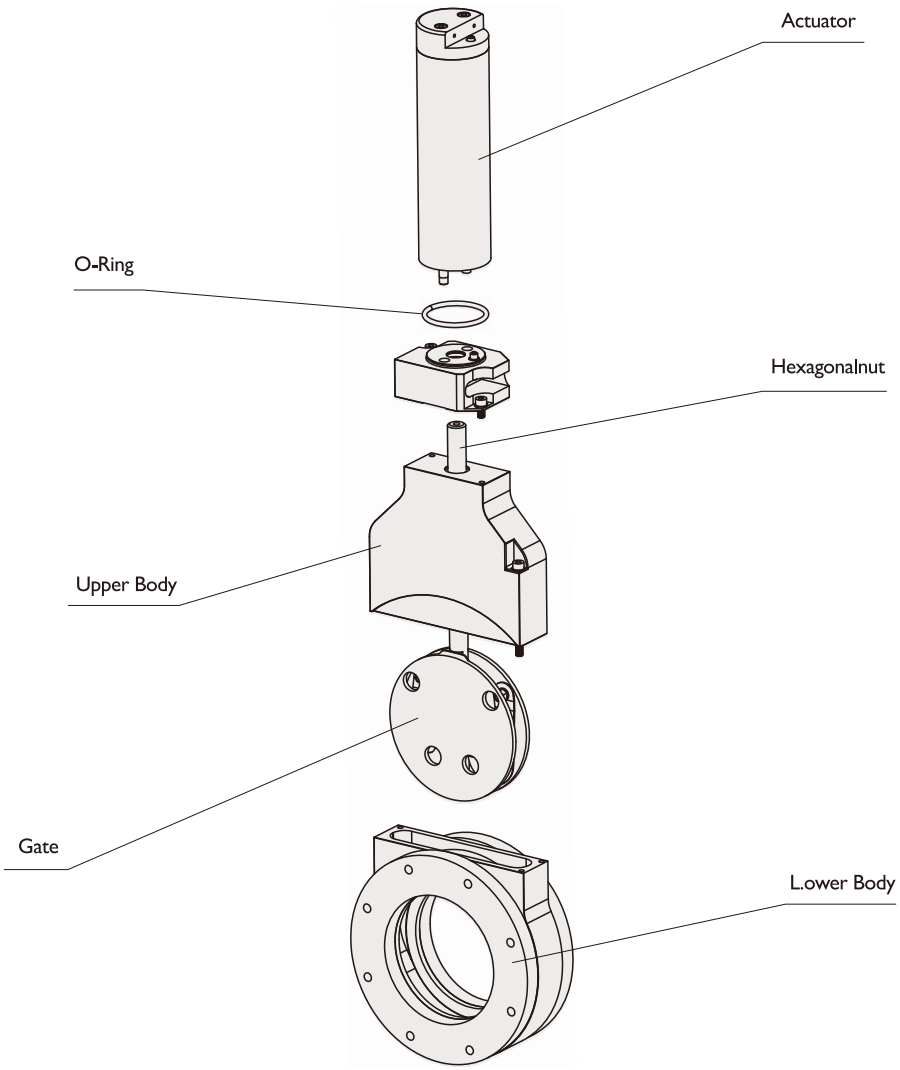

Technical Data For Aluminum Vacuum Gate Valves
真空铝质闸阀技术参数

Item Type	Technical Data			
Material	Body	EN-AW-6061		
	Cariage	EN-AW-6061		
	Gate	304SS		
Cycle Life	size under 4"(HV)	200000		
	size abover 4"(HV)	100000		
Leakage Rate	< 1.0x10^{-9} mbar.l /sec for O-ring sea			
Bake Temperature	Valve body	< 150°C		
	Manual and pneumatic actuator	< 80°C		
Pressure Range (mbar)	1x10^{-8}~1000			
Standard Seal	Gate	Viton O-ring		
	Bonnet			
Actuator	Pneumatic or Manual			
Operating Air Pressure	Φ6 mm,4-6.5 Kg/cm'(overpressure)			
Surface Treatment	Hard Anodized Color			
Options	A: Other Material Gate O-ring Seal ; B : Other Solenoid Voltage(Standard 24V DC)			
Maximum Differential Pressureagainst Gate	＜1600 mbar			
Maximum Differential Pressure At Opening	＜30 mbr			
Pneumatic Valve Open & Close Time /S	ISO80	ISO100	ISO160	ISO200
	1.7/S	2/S	2/S	3/S
Valve's Conductance (Molecular Flow)	ISO80	ISO100	ISO160	ISO200
	1000 L/S	2000 L/S	6000 L/S	12000 L/S

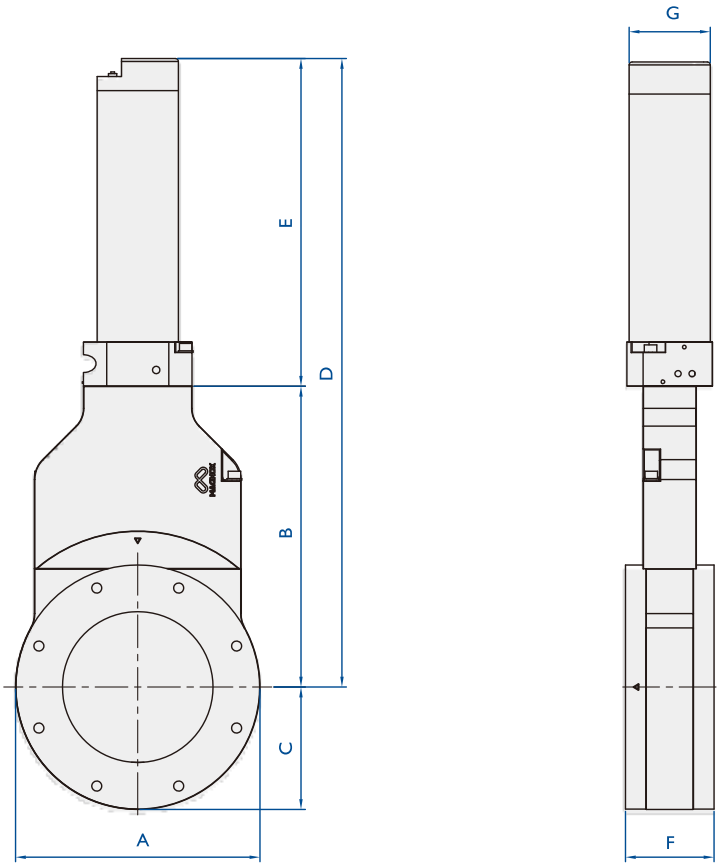

Aluminum Vacuum Gate Valves								
Part Number	Flange Size	Dimensions, mm						
		A	B	C	D	E	F	G
66226-0250	ISO63-F	145.60	155.50	73.00	339.40	183.90	60.00	55.00
66226-0300	ISO80-F	160.00	176.00	80.00	379.00	203.00	60.00	55.00
66226-0400	ISO100-F	203.00	203.50	82.50	422.90	219.40	60.00	55.00

Vent Valve For Bellow Seal

波纹管密封放气阀

Vent Valves are typically used to introduce air in to the vacuum chamber and bring the system up to flange for connection to the vacuum system, are manually operated, and made of stainless steal.

Specifications

Flanges: KF\CF
Valves: Bellow Valve
Connection Type: Tube\LOK\VCR
Gasket: Copper\FKM
Vacuum Range: ≥1*10^{-11} mbar-UHV
≥1*10^{-8} mbar-HV

Temperature Range
Metal Seal: -200°C To 450°C
Elastomer Seal: -20°C To 150°C

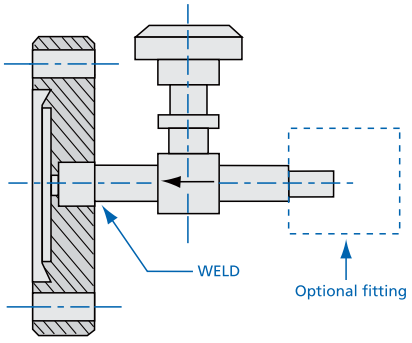

Part Number	Dimensions, mm		
	Flange Size	End	Tube Length
66217-01334VM	CF 16	1/4" MVCR	150mm&OPTION
66217-02754VM	CF 35	1/4" MVCR	150mm&OPTION
66217-01334VF	CF 16	1/4" FVCR	150mm&OPTION
66217-02754VF	CF 35	1/4" FVCR	150mm&OPTION
66217-01334SW	CF 16	1/4" LOK	150mm&OPTION
66217-02754SW	CF 35	1/4" LOK	150mm&OPTION
66217-01334TW	CF 16	1/4" TUBE	150mm&OPTION
66217-02754TW	CF 35	1/4" TUBE	150mm&OPTION
66217-00754VM	KF 16	1/4" MVCR	150mm&OPTION
66217-01004VM	KF 25	1/4" MVCR	150mm&OPTION
66217-00754VF	KF 16	1/4" FVCE	150mm&OPTION
66217-01004VF	KF 25	1/4" FVCR	150mm&OPTION
66217-00754SW	KF 16	1/4" LOK	150mm&OPTION
66217-01004SW	KF 25	1/4" LOK	150mm&OPTION
66217-00754TW	KF 16	1/4" TUBE	150mm&OPTION
66217-01004TW	KF 25	1/4" TUBE	150mm&OPTION

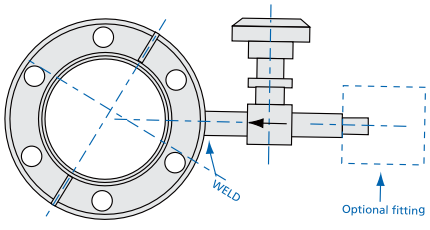

Part Number	Dimensions, mm		
	Flange Size	End	Tube Length
66218-01334VM	CF 16	1/4" MVCR	150mm&OPTION
66218-02754VM	CF 35	1/4" MVCR	150mm&OPTION
66218-01334VF	CF 16	1/4" FVCR	150mm&OPTION
66218-02754VF	CF 35	1/4" FVCR	150mm&OPTION
66218-01334SW	CF 16	1/4" LOK	150mm&OPTION
66218-02754SW	CF 35	1/4" LOK	150mm&OPTION
66218-01334TW	CF 16	1/4" TUBE	150mm&OPTION
66218-02754TW	CF 35	1/4" TUBE	150mm&OPTION

Vent Valve For Poppet Seal
提升机构放气阀

Specifications

Body:	304SS
O-ring seal:	Viton
Maximum leak rate across body:	less than1 x 10 -7 mbar.ls-1
Maximum leak rate across valve seat:	less than1 x 10 -7 mbar.ls-1
Weight:	100 grams
Flanges:	KF16 / KF25
Sutitable for:	Pipeline mounting.

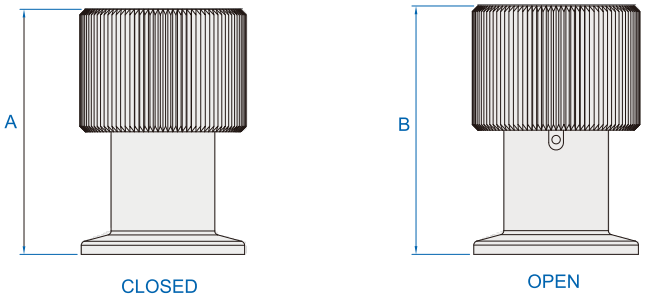

Part Number	Flange Size	Dimensions, mm	
		A	B
66216-0075	KF16	38.65	46.05
66216-0100	KF25	38.65	46.05



All Metal Bakeable Compact Manual Angle Valve

MAGNOX

Product Description
产品描述

MAGNOX bakeable all-metal angle and in-ine valves are designed for use in ultrahigh vacuum are designed for use in ultrahigh vacuum environments where elevated temperatures preclude the use of elastomers and low temperature gasket metals.
These valves provide reliable high temperature seals from atmospheric pressures to below 10^{-11} mbar.

When operated at ambient temperatures, all-metal valves provide hundreds of leak free cycles between routine poppet gasket replacements. In high temperature applications, life cycles are inversely proportional to the bakeout temperatures. When operated at the maximum bake out temperature of 450°C, the poppet seal gasket life is reduced to approximately 50 open/close cycles.

Features

- UHV-compatible to $x10^{-11}$ mbar
- Manual actuation
- Hundreds of seal cycles per gasket
- Replaceable OFHC copper poppet gasket
- High temperature service to 450°C
- 300 Series stainless steel construction
- Stainless steel bellows sealed actuator
- High conductance design

Specifications

Material	
Flanges	304SS
Valve body	304SS
Bolts	300SS
Gaskets, poppet and bonnet	OFHC Copper
Port fastening	
Bolt type	Socket head bolts
Nut type	Hexagonal nuts
Vacuum	
Range	$1x10^{-11}$ mbar
Leak test	$2x10^{-10}$ mbar litre/sec of He
Temperature range	
Closed/open	300°C/450°C

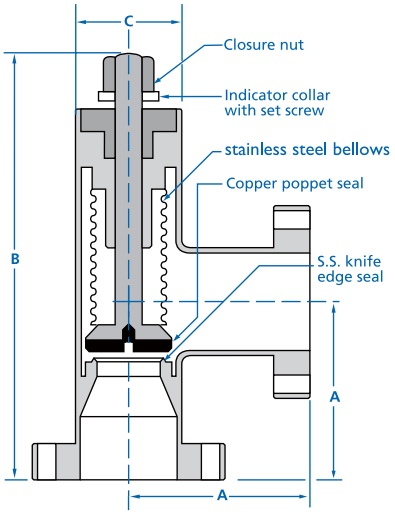

Bakeable All-metal Valves

Part Number	Flange Size	Dimensions, mm		
		A	(open) B	C
66220-0133	CF 16	38.00	137.00	38.00
66220-0275	CF 35	52.00	175.00	35.00

NOTE: Port lengths that match other manufacturers' products are available upon request.



Replacement Seals

Part Number	Flange Size
66219-0133	CF 16
66219-0275	CF35

Vacuum Flange Insert Check Valves

Valve shown with flanges and clamp. Flanges and clamp not included.

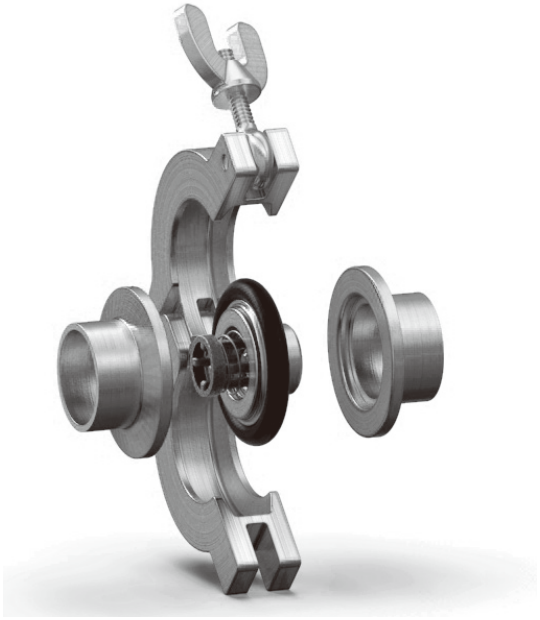



Vacuum Flange Insert Check Valves

The check valve is designed to fit between ISO/NW/KF/QF vacuum flanges designed in accordance with DIN 28403, DIN 28404, ISO 1609, and ISO 2861.It is both a centering ringand a check valve. The compact design reguires no additional space in the line. Its size makes it extremely economical when compared to full-bodied valves, The valve can also be used as a low pressure relief valveunder either positive or vacuum conditions by using the desired spring setting.

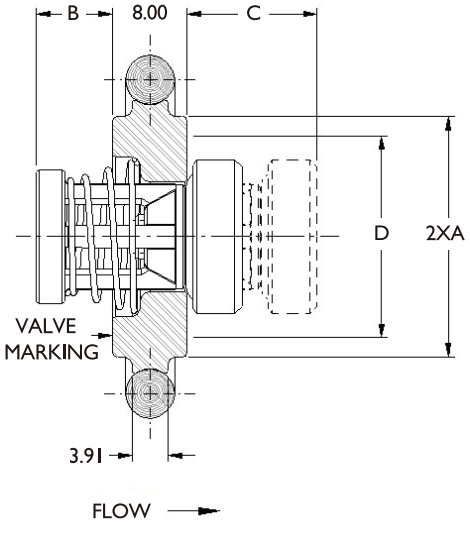

Flange Size	A	B	C	D	Orifice Diameter
KF16	16.99	7.87	13.21	15.75	0.35
KF25	26.01	8.90	14.48	22.10	0.46
KF40	41.00	17.02	20.83	34.80	0.89
KF50	51.99	22.10	25.40	47.50	1.14

Vacuum Check Valves

Vacuum Flange Insert Valve
For Water at 22 ℃

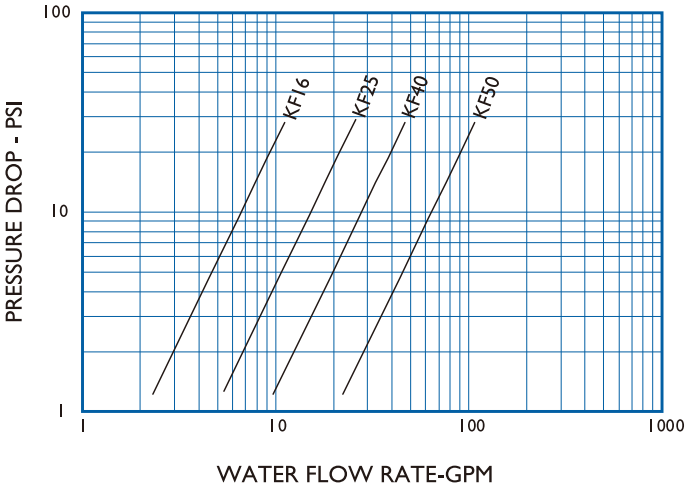

Note: All flow curves and Cv values presume the valves are fully open with 1/2 PSI cracking pressure springs. Consult the factory for more information.

Style Vi C_V Values & Valve Weights		
C_V	Flange Size	304L SS
2.4	16	0.02kg
4.6	25	0.05kg
9.5	40	0.12kg
20.9	50	0.20kg

Ordering Information

66227 – 0150 – 10FK – 16

产品系列	
66227	支架式真空单向阀

终端接口	
0075	KF16
0100	KF25
0150	KF40
0200	KF50

本体材质		密封圈材质	
10	SUS304	FK	氟橡胶
40	SUS316L	FF	全氟醚橡胶

开启压力 PSI	
08	0.5
16	1.0
24	1.5

Note:
Listed above are the most common material selections, Please contact the factory for additional options.
Many other cracking pressures are available. All spring tolerances +/- 15%.

MEMO

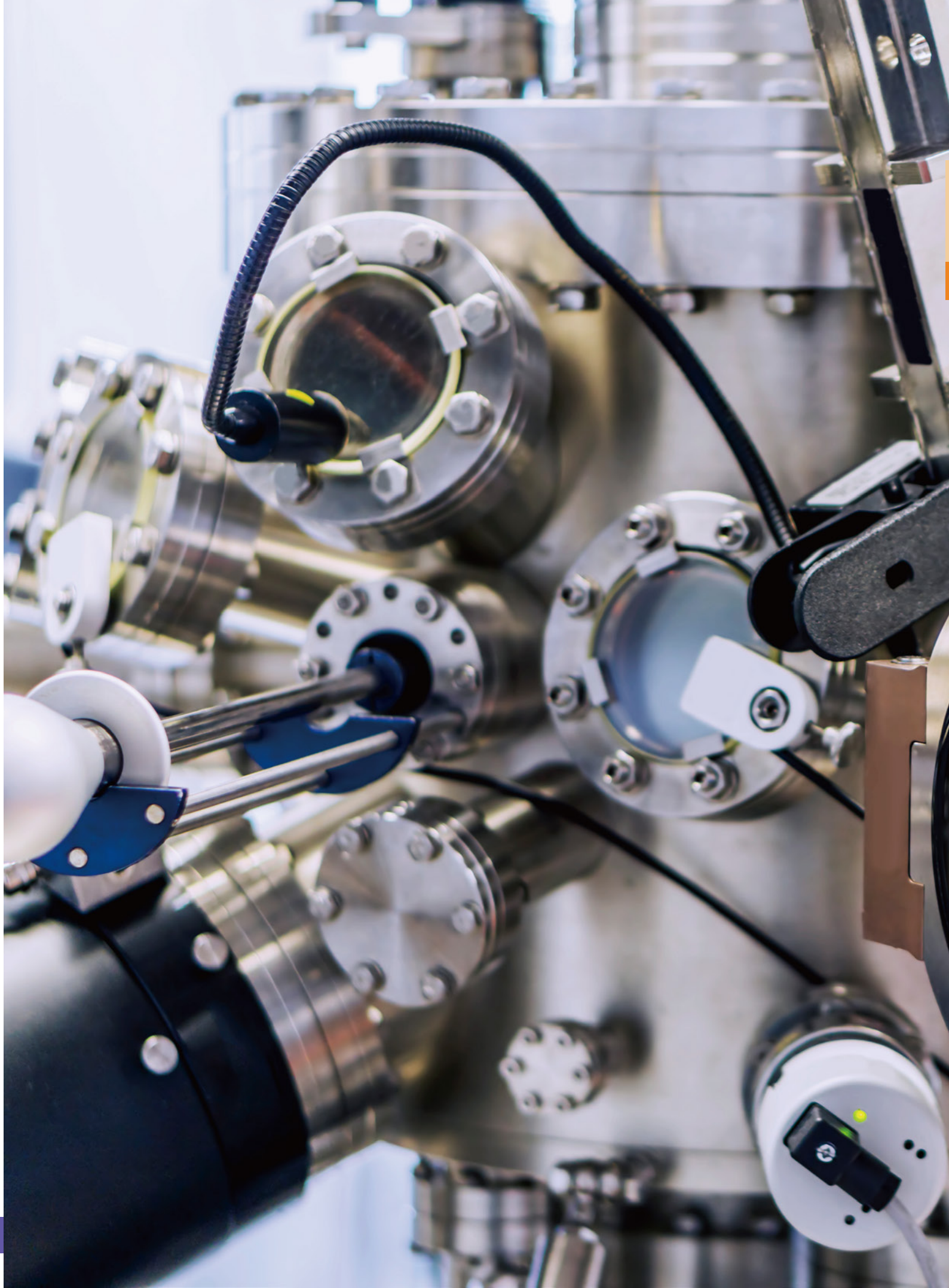

2 Chambers & Weldments

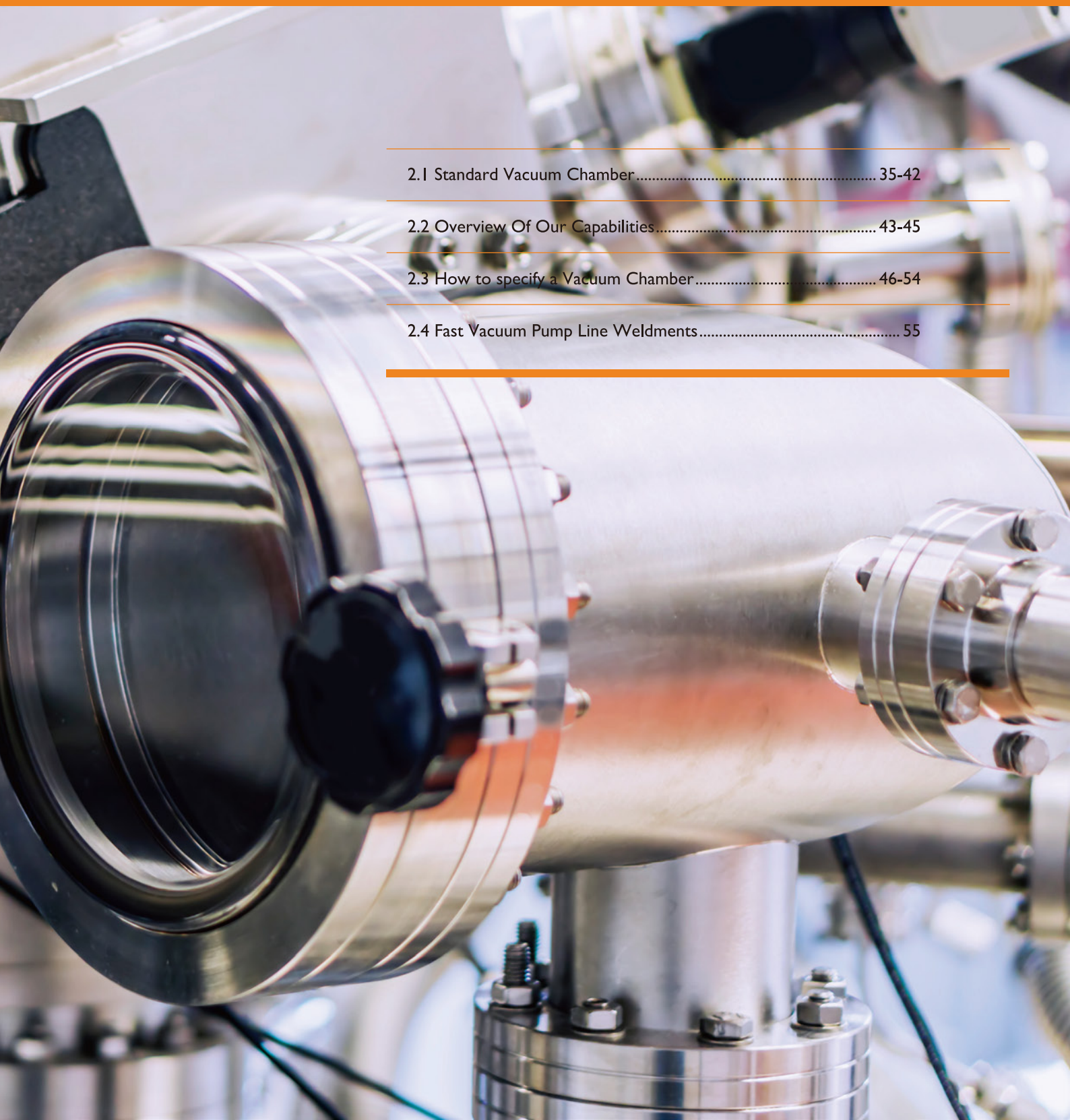

2.1 Standard Vacuum Chamber 35-42

2.2 Overview Of Our Capabilities 43-45

2.3 How to specify a Vacuum Chamber 46-54

2.4 Fast Vacuum Pump Line Weldments 55

Standard Vacuum Chamber

Spherical Chamber

Specifications

- 12" or 16"nominal diameter x 1/8" wall
- 304L stainless steel construction
- Electropolished surface finish for UHV service
- Flange ports are non-rotatable Del Seals with thru bolt holes
- All ports target chamber center
- Bakeable to 400°C
- IFrame mounting brackets

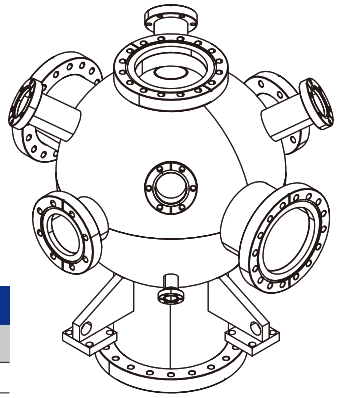

Part Number	Tube Size	Description
66659-1200	12"	12"diaweter Spherical Chamber
66659-1800	18"	18"diaweter Spherigal Chamber

Surface Science Analysis Chamber

Specifications

- Proven design
- 18 Access Ports
- Del-Seal™ CF metal seal flanges
- Precision component alignment
- All type 304 stainless steel construction
- Bakeable to 450°C
- UHV compatible to 1 x 10^{-11} Torr

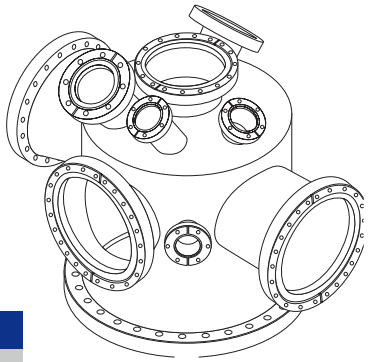

Part Number	Tube Size	Description
66660-1400	14"	Surface 5cience Anay5i5 Chamber With 14"female Wire Seal Flange On Port 17
66660-1458	14-5/8"	Surface Science Analysis Chamber With 14-5/8" Del-seal™ Flange On Port17

Stainless Steel Bell Jar

Specifications

- Material
- Bell Jar 304SS
- Gasket, elastomer Viton®
- Seal
- Gasket, elastomer O-ring
- Method Gravity
- Vacuum Range 1x10^{-6}Torr
- Temperature Range Ambient to 150°C

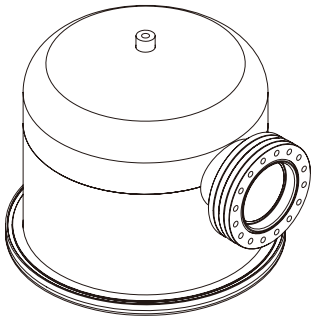

Part Number	Tube Size	Flange O.D.	Description
66661-1200	12"	14.00	Feedthrough Collal
66661-1800	18"	20.00	Feedthrough Collar
66661-2400	24"	26.00	Feedthrough Collar

Standard Vacuum Chamber

Feedthrough Collar Chamber

Specifications

- Material
- Feedthrough Collar — 304SS
- Gasket, elastomer — O-ring
- Method — Gravity
- Vacuum Range — $1x10^{-6}$ Torr
- Temperature Range — Ambient to 150°C

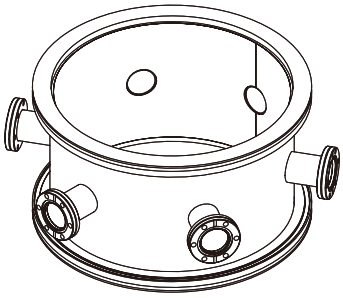

Part Number	Tube Size	Flange O.D.	Description
66662-1200	12"	14.00	Feedthrough Collal
66662-1800	18"	20.00	Feedthrough Collar
66662-2400	24"	26.00	Feedthrough Collar

Base Well

Specifications

- Material
- Base Well — 304SS
- Gasket, elastomer — O-ring
- Method — Gravity
- Vacuum Range — $1x10^{-6}$ Torr
- Temperature Range — Ambient to 150°C

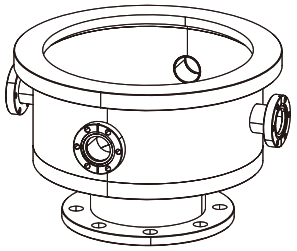

Part Number	Tube Size	Flange O.D.	Description
66663-1200	12"	14.00	Baseplate and Base Well
66663-1800	18"	20.00	Baseplate and Base Well
66663-2400	24"	26.00	Baseplate and Base Well

Box Chambers With Aluminum Doors

Specifications

- Versatile Chamber with FKM O-ring sealed door. MAGNOX's Box Chambers can be used for many applications
- Including tribology, degassing, atmospheric testing, thin film deposition and space simulation.
- Standard Features:
- Chamber Body Manufactured from 304 Stainless Steel Plate
- Chamber Door Manufactured from 6061-T6 Aluminum Plate
- Door Sealed Via Dovetail Groove & O-Ring, Includes Rectangular Viewport With Safety Cover
- Capable of Reaching High Vacuum (HV) Levels

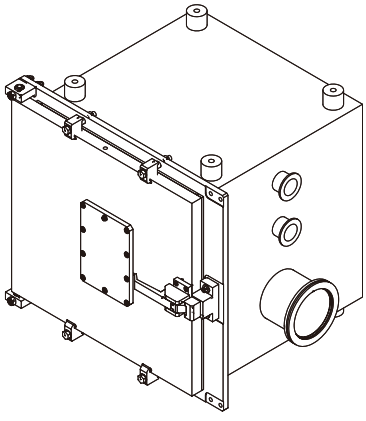

Part Number	Inside Width\Height\Depth	Description
66664-1200	12"	12" Box Chamber
66664-1800	18"	18" Box Chamber
66664-2400	24"	24" Box Chamber
66664-3000	30"	30" Box Chamber
66664-3600	36"	36" Box Chamber

Standard Vacuum Chamber

UHV微型真空室

- UHV miniature vacuum chamber.
- Part No.:66651-A6
- 6*CF16-mulit-port chamber
- (8)Extemal tapped holes for system mounting
- Spherical ID:1.0"(27.94mm)
- Internal volume:16 cc
- Weight: 0.15 kg
- Non-standard customization is acceptable.
- For more information, visit the website or contact sales engineer.

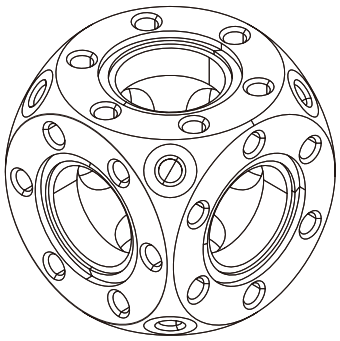

UHV微型真空室

- UHV miniature vacuum chamber.
- Part No.:66651-A8C4
- Allemale configuration 2 includes 4*CF35 and 8*CF16
- Grabber Grooves for internal mounts on Cf35
- Spherical ID: 2.60"(66.04mm)
- Internal volume: 211 cc
- Weight: 1.29 kg
- Non-standard customization is acceptable.
- For more informalion,visit the website or contacl sales engineer.

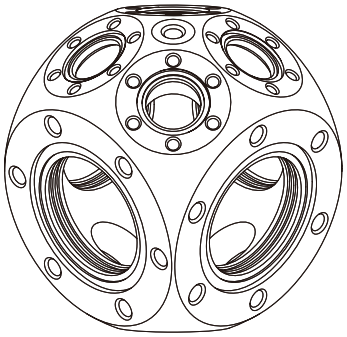

UHV微型真空室

- UHV miniature vacuum chamber
- Part No.:66651-A4C5
- Alternate configuration 1 includes 5*CF35 and 4*CF16
- Grabber Grooves for internal mounts on Cf35
- Spherical ID: 2.60"(66.04mm)
- Internal volume: 203 cc
- Weight: 1.16 kg
- Non-standard customization is acceptable.
- For more information,visit the website or contact sales engineer.

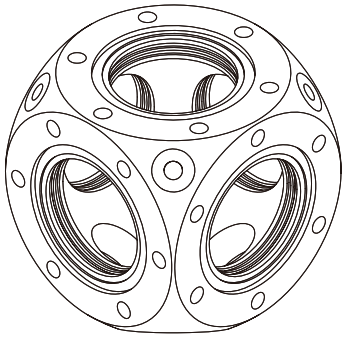

UHV微型真空室

- UHV miniature vacuum charriber
- Part No.:66651-C6
- 6*CF35
- Grabber Grooves for interrial mounts on CF35
- (8)External tapped holes for system mounting
- Spherical ID: 66.04mm
- Internal volume: 195 cc
- Weight: 1.04 kg
- Non-standard customnization is acceptable.
- For more infomalion,visit the website or contacl sales engineer.

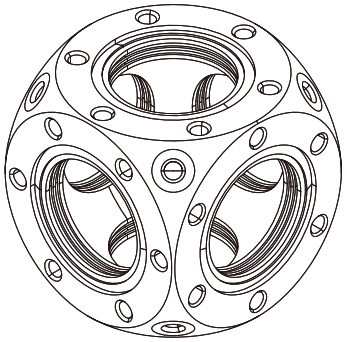

UHV微型真空室

- UHV miniature vacuum chamber.
- Part No.:66651-C6A8
- Expanded version includes 6*CF35 and 8* CF16
- Grabber Grooves for internal mounts on CF35
- SphericalID:3.30(83.82mm)
- Internal volume:397 cc
- Weight: 2.05kg
- Non-standard customization is acceptable.
- For more information, visit the website or contact sales engineer

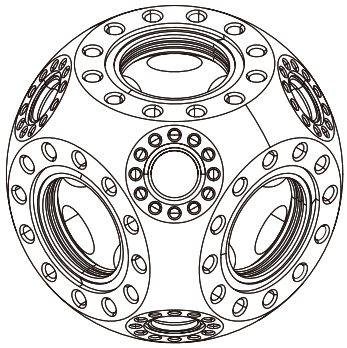

UHV微型真空室

- UHV miniature vacuum chamber
- Part No.:66651-E6
- 6*CF63
- Grabber Grooves for internal mounts on CF63
- Spherical ID:4.80"(121.91mm)
- Internal volume: 2111.145 cc
- Weight: 4.18 kg
- Non-standard customization is acceptable.
- For more information,visit the website or contact sales engineer.

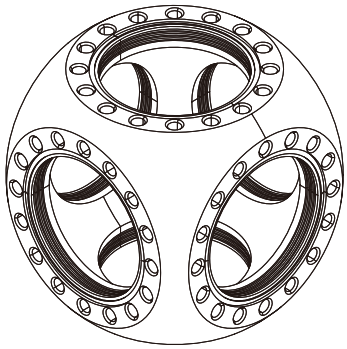

UHV微型真空室

- UHV vacuumn chamber
- Part No.:66651-E6A8
- 6*CF63 and 8*CF16
- Grabber Grooves for internal mounts on CF35
- Spherical ID:4.80"(121.92mm)
- Internal volume: 1.174cc
- Weight: 3.81kg
- Non-standard customization is acceptable.
- For more information,visit the website or contact sales engineer.

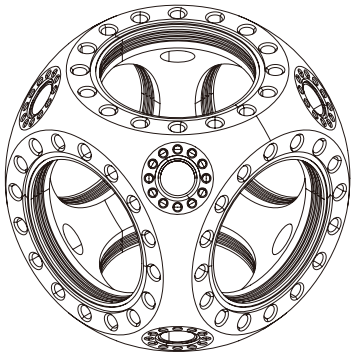

UHV微型真空室

- UHV vacuum chamber.
- Part No.:66651-E6C8
- Expanded version includes 6*CF63 and 8 CF35
- Grabber Grooves for internal mounts on all ports
- SphericalID: 165.1mm
- Internal volume: 2.774 cc
- Weight: 9.71 kg
- Non-standard customization is acceptable
- For more information,visit the website or contact sales engineer.

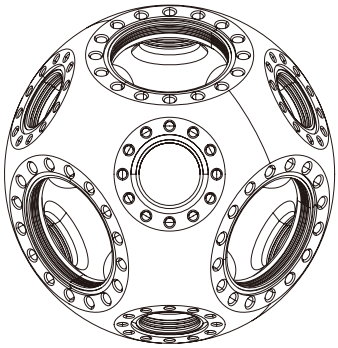

UHV微型真空室

- UHV miniature vacuum chamber.
- Part No.:66651-E6C8A12
- Expanded version includes 6*CF63,8*CF35 and 12*CF16
- Grabber Grooves for internal mounts on Cf35 and larger
- Spherical ID:165.1mm
- Internal volume:2.838 cc
- Non-standard customization is acceptable.
- For more information, visit the website or contact sales engineer.

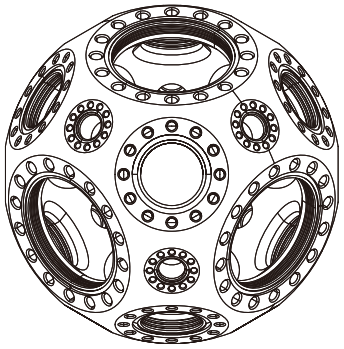

UHV微型真空室

- UHV minialure vacuum chamber.
- Part No.:66651-G6
- Version includes 6*CF100
- Grabber Grooves for inlernal mounts on Cf100
- Spherical ID:8.4"(213.36mm)
- Internal volume: 5.512 cc
- Weight: 18.97 kg
- Non-standard customization is acceptable.
- For more information,visit the website or contact sales engineer.



UHV微型真空室

- UHV miniature vacuum chamber
- Part No.:66651-G6C8
- Version includes 6*CF100 and 8*CF35
- Grabber Grooves for internal mounts on all ports
- Spherical ID: 8.4"(213.36mm)
- Internal volume: 5.714 cc
- Weight: 16.54kg
- Non-standard customization is acceptable.
- For more informalion,visit the website or conlact sales engineer.



UHV微型真空室

- UHV miniature vacuurn chamber.
- Part No.:66651-G6C8A24
- Version includes 6*CF100 ,8*CF35 and 24*CF16
- Grabber Grooves for internal mounts on Cf35 and larger
- SphericalID:84"(213,36mm)
- Internal volume: 5.902 c
- Weight: 15.03 kg
- Non-standard customization is acceptable
- For more information,visit the website or contact sales engineer.



UHV微型真空室



- UHV vacuum chamber.
- Part No.:66651-16C8
- 6*CF160and 8*CF35
- Grabber Grooves for internal mounts on all ports
- SphericalID:20"(259.08mm)
- Internal volume:9057 cc
- Weight: 14.4kg
- Non-standard customization is acceptable
- For more information, visit the website or contact sales engineer.

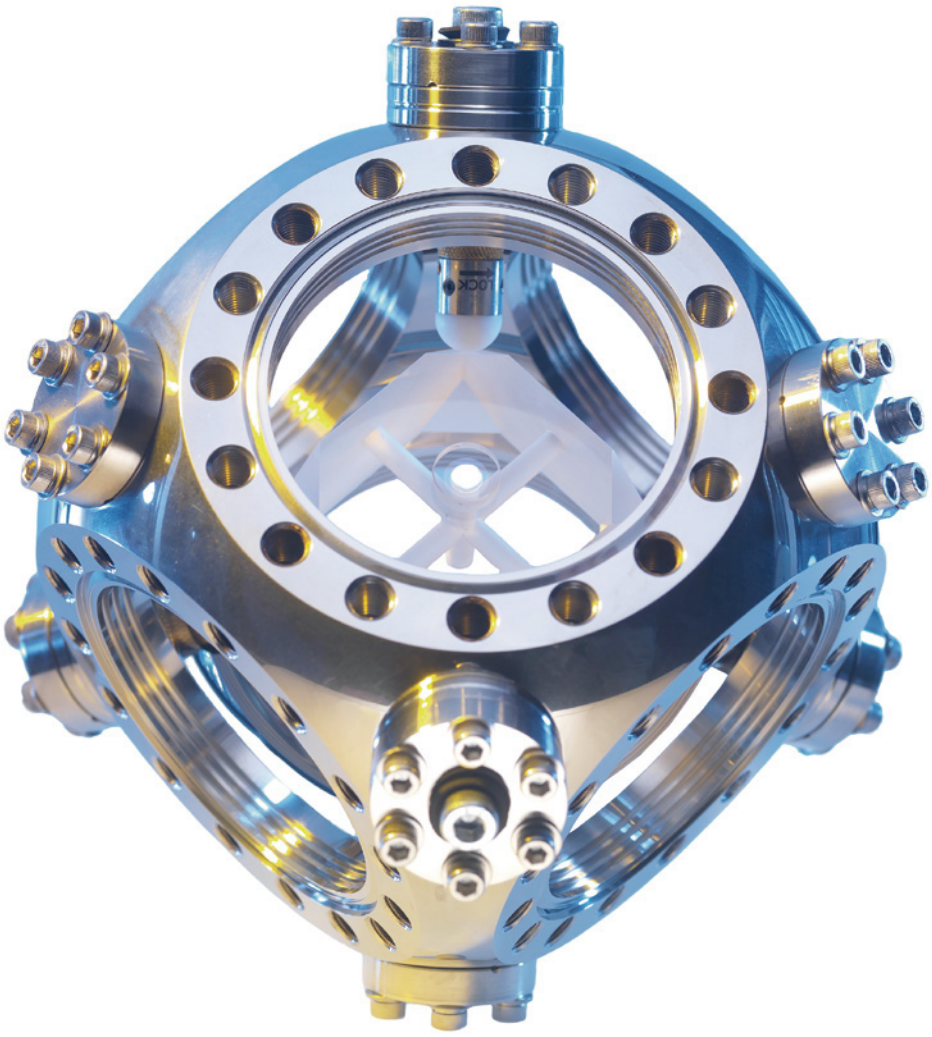

Overview Of Our Capabilities

The culmination of our deep-seated expertise in the vacuum industry is a dual capability in volume production of standard components and sophisticated custom engineering. Our team of professional engineers draws upon this substantial technical accumulation to provide meticulously tailored solutions that fulfill client design objectives.

源于在真空领域的深耕，我们兼具规模化标准件制造与高端客制化开发能力，专业的工程师团队将依托深厚的技术积累，为客户提供精准的解决方案，以符合客户的设计需求。

The professional vacuum application technology of Magnox can meet various needs of customers. Available in all kinds of chamber such as ball type, square type,cylinder type,bell type,and relevant supporting vacuum pipes, standard pipe fittings, valves,etc.in high vacuum(HV) and ultra high vacuum (UHV) systems.

迈格诺科专业的真空应用技术满足客户各种不同工况需求。可提供如高真空（HV)和超高真空(UHV）系统中应用到的球型、方型、圆柱型、钟罩式等各类腔体及相关配套的真空管路、标准管件、阀门等。

- International brands of vacuum leak detector, 100% helium mass spectrometer leak detection, to ensure that the product leakagerate meets the design requirements.
- 国际一线品牌的真空检漏仪，100%氦质谱测漏，确保产品漏率满足设计要求。
- Design, fabrication and on site installation service for non-standard pipeline.
- 非标管路和管道工程的设计、加工制作及现场安装服务。
- Design and manufacture of various vacuum chambers.
- 满足各种形状真空腔体的设计、加工、制作需求。
- Provide customers with a complete set of precise machining technology solutions including design, manufacturing, consulting, etc.
- 为客户提供设计、制造、咨询等全套精密加工技术解决方案。
- Complete customer property confidentiality system to ensure that the customer's intellectual property rights are not disclosed.
- 完善的客户产权保密系统，确保客户的知识产权不被外泄。
- Applicable industries: semiconductor, LED display, photovoltaic,OLED, optical fiber communication, scientific research, biochemicalmedicine, food and other industries.
- 适用行业:半导体、液晶显示、光伏、OLED、光纤通信、科研、生化医药及食品等行业。
- Adapt to different material request, such as stainless steel, aluminum, copper, etc.
- 适应各种不同加工材料需求，如不锈钢、铁合金、铝材、铜材等。



Overview Of Our Capabilities

MAGNOX

High and ultra-high vacuum chambers are complex engineered systems that demand specialized materials and fabrication techniques. To clarify system specifications for designers and practitioners, the following outlines Magnox's core capabilities and standard practices.

高真空和超高真空腔体是复杂的工程系统，需要使用专业的材料和制造工艺。为了向设计人员和使用者明确系统规格，以下概述介绍了迈格诺科公司的核心能力及标准作业流程。

Materials 材料

Standard materials: Because of its high corrosion resistance, low out gassing rates, wide range of applicable temperatures, machinability, weldability, and relative cost,Magnox's standard material for tube sections, spheres and roll-ups is 304L. stainless steel. Many other materials are available upon request. Magnox routinely works with 304, 316, and 316L stainless steels as wells as 6061 T6 aluminum; 360 free machining brass can also be supplied.

Magnox specifies a magnetic permeability not to exceed 1.02μ when ordering raw 304 stainless materials. Welding and machining processes may result in heat affected or cold-worked zones that may increase magnetic permeability in these zones. Minimizing seams, joints, and bends in areas of high magnetic sensitivity should be considered during the design process.For applications that require superior magnetic flux shielding, mumetal can also be supplied.

Flanges: Magnox's flanges are made from specially manufactured raw stock that is designed to maximize the vacuum capabilities of 304 stainless. These processes minimize impurities and inclusions that could adversely impact thestee's ability to maintain vacuum, Grain size, orientation, and density are also engineered to maximize the vacuum performance of the raw stock.

Fabrication 制造

Welding

Magnox uses tungsten inert gas (TIG/GTAW) welding techniques with high purity argon as the backfill/purge gas Both manual and automated orbital welding machines are employed in accordance with good UHV fabrication practices,non-filler material internal fusion weld joints are utilized wherever possible.

In those instances where geometries preclude internal welds, one hundredpercent, 100% full penetration welds are provided.To minimize sources of virtual leaks, external welds are only used when required for structural reinforcement and are limited to stitch, skip, span, or spot weld configurations.

Machining

State-of-the-art, multi-axis,CNC machine centers are at the heart of Magnox's operations our work processes our built upon the dual goals of high quality and rapidturnaround.Our machining coolants are sulphurfree,biodegradable,and recycled.

Surface Finishes

Flanges and machined components (faced,turned or bored)come standard with a 32 micro-inch surface finish.Chambers are internally and externally bead blasted. Electropolishing and manual polishing are additionaloptions.





Cleaning and Packaging 清洗包装

Upon final machining, most components are washed in a heated ultrasonic detergent bath followed by multiple ultrasonic deionized water rinses to remove all residual machining lubricants. After final rinse, parts are blown dry with dry, heated, filtered air and packaged.

After cleaning and testing, flanges and small Components are hermetically sealed in vacuum board packaging and are ready for UHV installation, Larger flanges are covered with a layer of foil and protective plasticshields. Weldments and assemblies are then bagged, bubble-wrapped, and inserted into a shipping container surrounded by void filling "pillow" wrap. Custom crating is available.



Leak Testing and Quality Control 泄漏测试及质量控制

All weld joints and sealing surfaces are certified with state-of-the-art helium mass spectrometer leak detectors to a maximum rate of 1×10^{-9} std. cchelium. Leak testing is typically conducted in an "outside-in" or tracer-probe configuration. Helium(gas) bag tests are conducted as needed.

The highest standards of quality control inform every aspect of our operational practices. We welcome customer audits. Dimensional checks are confirmed with a controlled Computer Measuring Machine(CMM),Material and CMM certifications can be provided upon request.



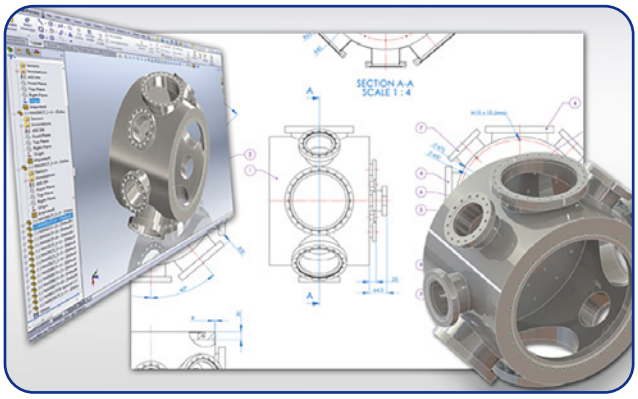



Our engineers use the latest version of 2D and 3D software and accept a variety of file formats.Unless otherwise specified, all our pipe used specifications in inch.Chamber with diameter less or equal to 10 inches will be d manufactured with standard size pipes.Pipe with size above10 inches or any customzied size is manufactured with rolling steel (For the wall thickness parameters of rolled round pipes, please refer to the table below.)

我们工程部门使用最新版本的二维和三维软件，可接收多种格式图纸文件。除非另有说明，我们所有的管道均选用英寸规格。直径小于或等于10英寸的定制腔体的主体将由标准管材制造。10英寸以下非标准尺寸及10英寸以上的管道，采用卷圆工艺加工。(关于卷圆管道的壁厚参数可参见本书44页)

Please note that these wall thicknesses are given as reference only.Actual thicknesses may vary according to a chambers overall design inch the size and quantity of ports being fitted. Contact magnox technical sales engineers for more details.

请注意，所提供的壁厚仅供参考。实际壁厚可能因腔体整体设计、端口尺寸及配置数量的不同而有所变化。更多详情，请联系迈格诺科销售工程师。

Chamber Wall Thickness

Chamber Diameter	Wall Thickness
≤10.00	3.00
＞10.00 but ＜ 24.00	5.00
≥10.00	6.50

Flanges assembly welding. Such as no special requirements. default across CF flanges bot hole Angle on the vertical centre ine. and CF flange leak test slot vertically,in figure 1, In addition, all the flange sealing surface with their vertical pipe axis, as shown in figure 2.

法兰组装焊接时，如无特殊要求，CF法兰螺栓孔角度默认跨在垂直中心线上，且CF法兰泄漏测试槽垂直放置，如图1所示。此外，所有法兰密封面与它们的配合管轴线垂直，如图2所示。

Figure 1

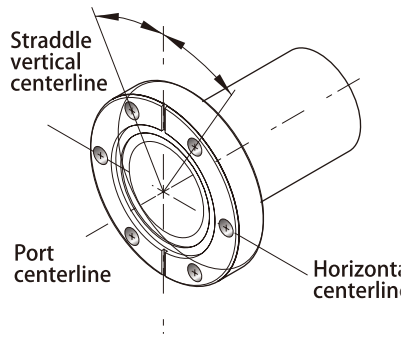

Figure 2

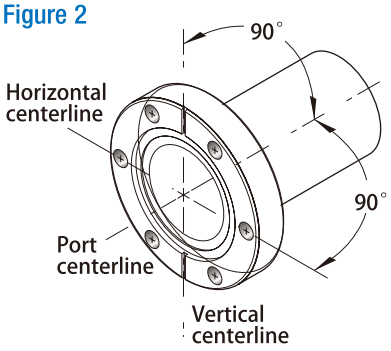

Unless otherwise stated,the tolerance standard of our machined products is GB/T 1804-2016.the tolerance standard of welded products is GB/T1804-2016 and the Angle tolerance of cavity flange port is 1.0 by default.

除另有说明，我们机械加工产品执行公差标准为GB/T1804-2016. 焊接产品执行公差标准为GB/T1804-2016，腔体法兰端口角度公差默认为±1.0°。

For batch products, we sample the number of samples according to GB/T2 828.1-2003 standard.Because of the use of different standards the processing cycle of the product, processing technology, processing costs are diferent. We suggest that no mater what standard is used. please be sure to fully discuss with our sales engineer on feasibility. cost budaet, delivery time and other issues before quoting.so that we can match the best processing solution for you.

对于批量产品，我们抽检样本数量执行GB/T2828. 1-2003标准。

因为采用不同的标准，对产品的加工周期、加工工艺，加工成本等均有不同。我们建议无论采用何种标准，在报价前请务必与我们销售工程师就可行性和成本预算、交货周期等问题进行充分讨论，以便我们为您匹配最优的加工方案。

How to speciy a custom chamber 如何定制真空腔室

There are three basic steps to specifying a custom vacuum chamber:

(1) Specify the main body style and dimensions;
(2) Specify chamber ports (2a) and port mounting configurations (2b);
(3) Specify application specific design considerations.

Spherical

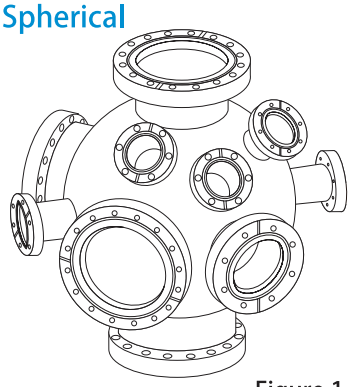

Figure 1

Cylinder

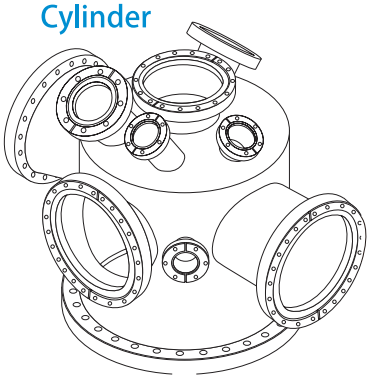

Figure 2

Box

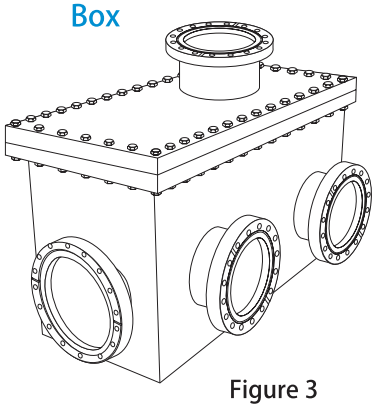

Figure 3

STEP 1

There are essentially three main body styles that are commonly used in vacuum applications today:

1. Spheres and hemispheres: Two hemispheres are welded together to form a spherical chamber body.A spherical configuration provides the highest surface area to volume ratio and is (often) lighter than a cylindrical chamber of similar volume. However, manufacturing considerations often make spherical chambers the least economical solution,

2. Cylinders with hemispherical ends, flat ends, or flanged ends: The body of these chambers is made of either vacuum grade tubing or a custom tubing "rol-up"depending on the diameter required. The lid and base plate are made from a dish head, hemisphere or customized blank flange. Cylindrical chambers are the most commonly chosen vacuum chamber configuration.

3. Rectangular or cubic boxes:These chambers are manufactured with metal plate material that is custom machined and welded to form the chamber body.

Once a main body style is chosen, specify the appropriate overall outer dimension(s).
Figures 1 through 3 show examples of each main body style.

STEP 2a:

Choose the appropriate three-dimensional coordinate system (spherical, modified cylindrical, or cartesian) and specify each port center in coordinates of the chosen system. A complete specification of a port center includes: 1)The center point of the port in the appropriate coordinate system, 2) The focal length, 3) The focal point. Examples of how these coordinate systems are applied to each of the typical main body styles are provided in Figures 4through 6.A complete port specification example for a cylindrical chamber is provided in Figure 7.

Spherical Chamber

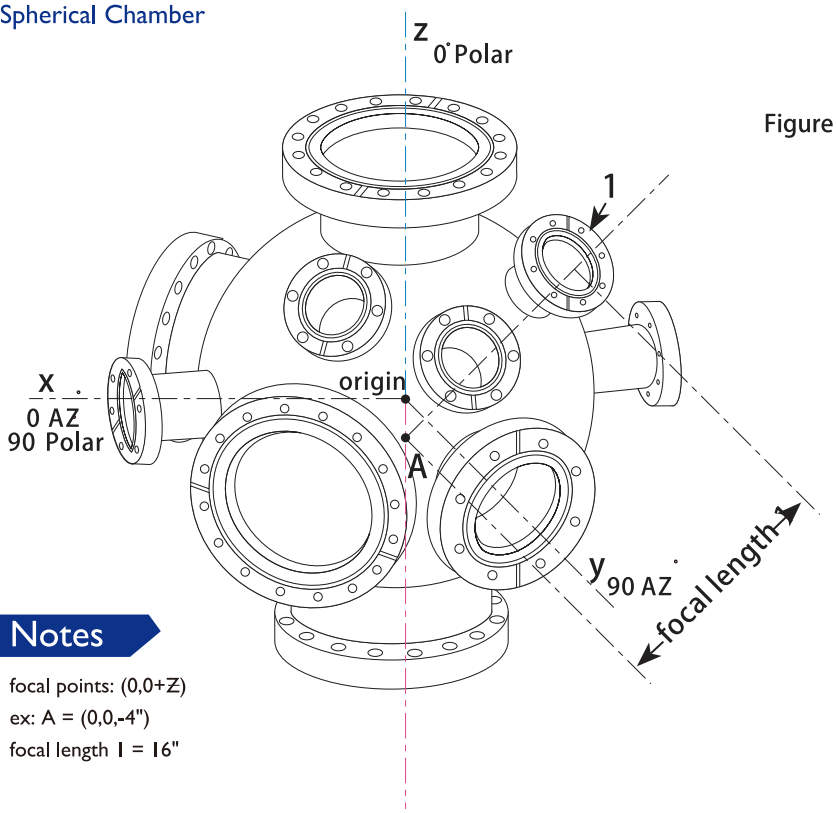

Figure 4

Notes

focal points: (0,0+Z)
ex: A = (0,0,-4")
focal length 1 = 16"

Sample port specification data

Port Number: 1
Flange Size(1):CF275
Flange Style (2):R
Bolt Hole Style (3): H
Mounting Config.(4):T
Tube O.D.(in):1.5
0Tube Thickness (5):Standard
Focal Point:A
Focal Length (in):16.00
Azimuthal Angle:135°
Polar Angle:60°

Box Chamber

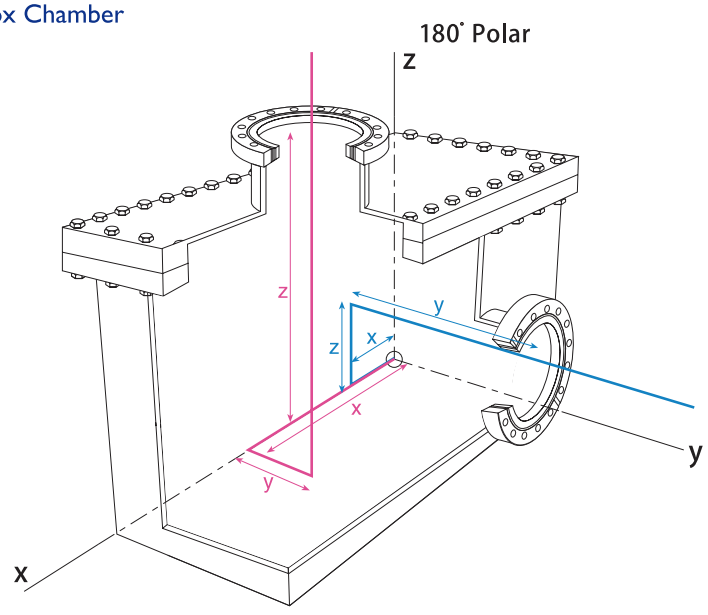

Figure 5

Coordinates of the point P= P(xy,z) specify the center of the flange.

STEP 2a:

Choose the appropriate three-dimensional coordinate system (spherical, modified cylindrical, or cartesian) and specify each port center in coordinates of the chosen system. A complete specification of a port center includes: 1) The center point of the port in the appropriate coordinate system, 2) The focal length, 3) The focal point. Examples of how these coordinate systems are applied to each of the typical main body styles are provided in Figures 4 through 6. A completes port specification example for a cylindrical chamber is provided in Figure 7.

Cylindrical Chamber:

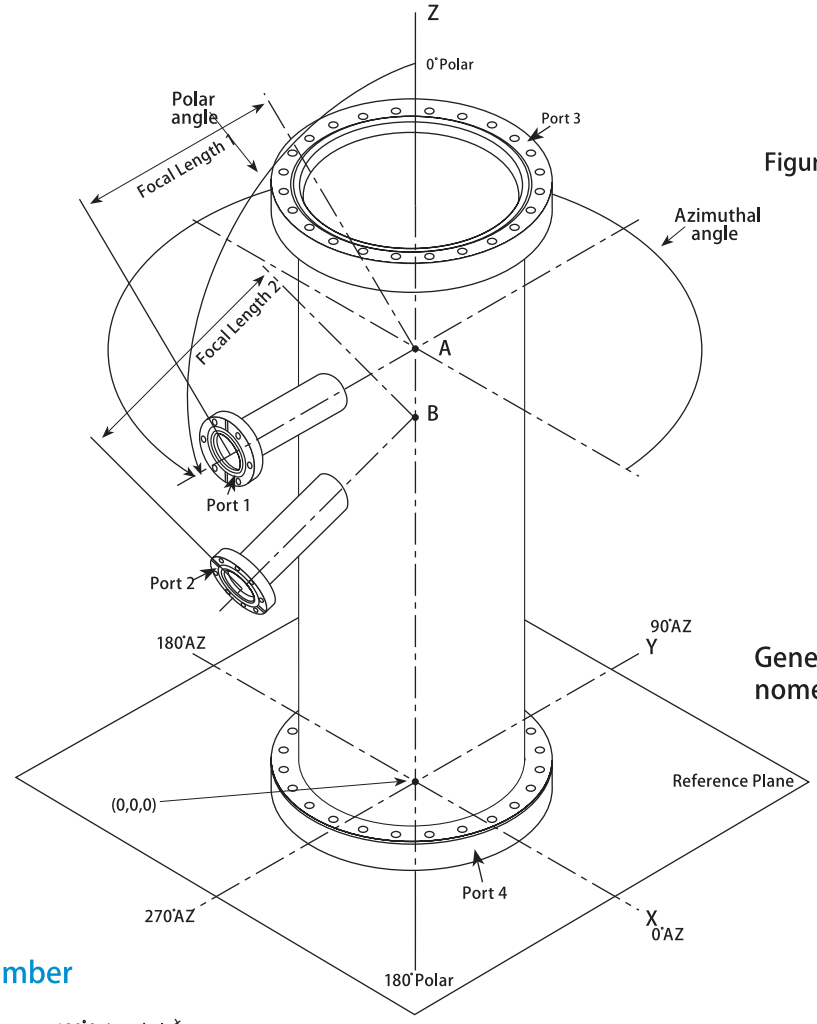

Figure 6A

General chamber nomenclature

Notes

focal points: (0,0, Z)
(X=0,Y=0,Z)
examples:
A=(0,0,24")
B=(0,0,20")

Cylindrical Chamber

Figure 6B

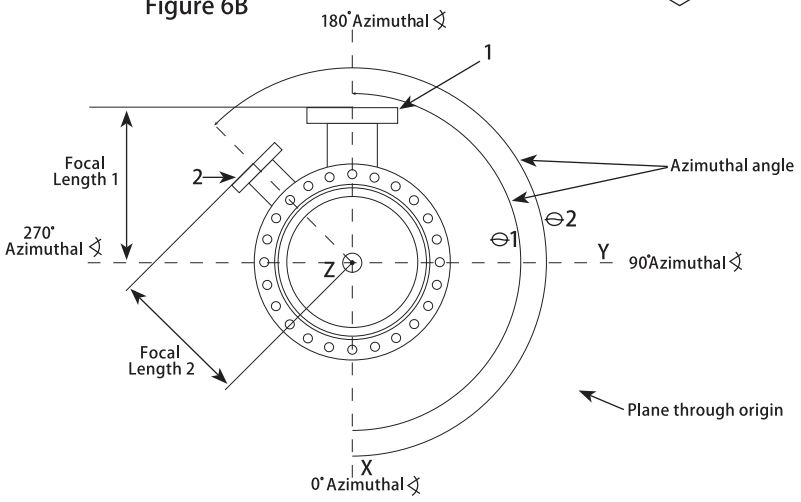

STEP 2a:

Using the conventions provided in this section, steps 2a and 2b have been completed for the seven ports shown on the cylindrical chamber below (Figure 7).

Cylindrical Chamber:

Notes

focal points: (0,0, Z)
examples: "A" 0,0,0
"B" 0,0,10
"C" 0,0,8

Figure 7

Notes

focal points: (0,0, Z)
examples: "A" 0,0,0
"B" 0,0,10
"C" 0,0,8

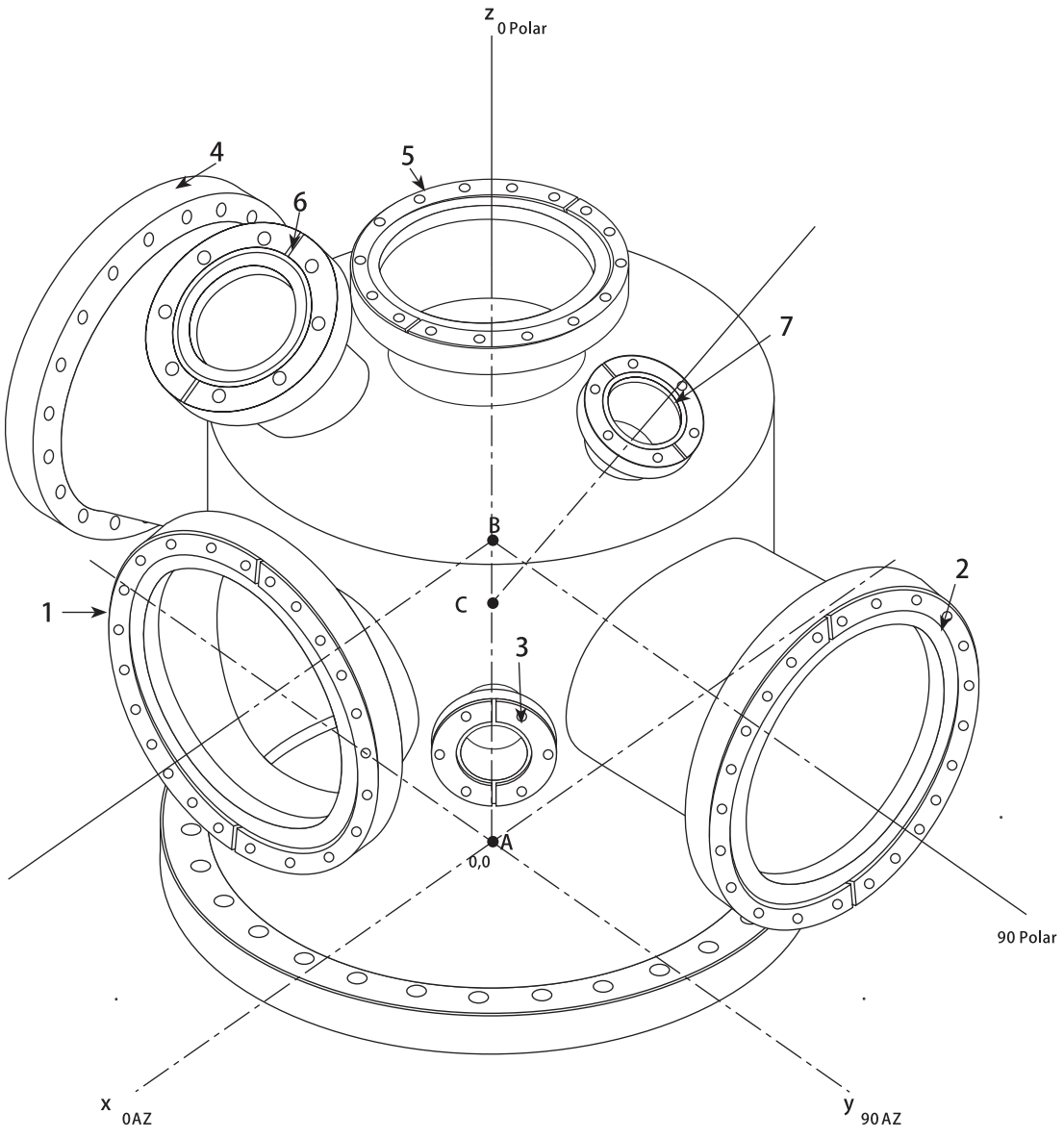

STEP 2b:

One example of the multiple ways to specify a custom component

The flange assembly at right depicts four popular methods of installing flanges in to a larger flange or plate. Del-Sealm CF metal seal flanges have been used for the purpose of this example. The methods described would apply to most any flange type and configuration. The four methods of construction are referred to as standard tubulated, top flush mounted, zero length recessed and single piece integrally machined, These are given as examples for commonly asked questions. Discussing your application with an Magnox technical sales engineer will help determine the appropriate solution for your application.

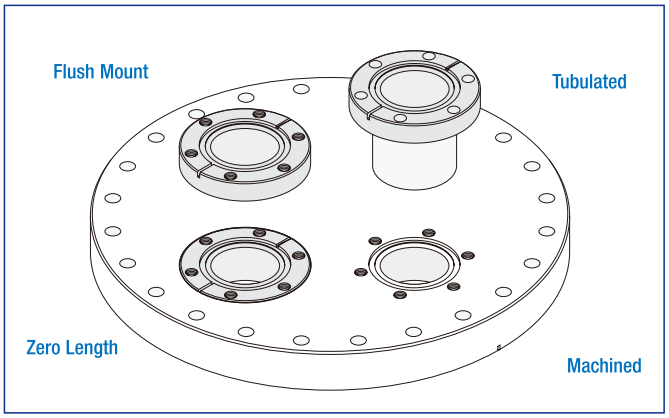

The tubulated method of construction would be one in which a standard or custom half-nipple is welded to the larger flange at the tube end, The larger flange or plate is counter-bored to match the tube's inside and outside diameters. The tube to flange transitions are welded in the same fashion along the bore's inside diameter. This method of construction allows the use of clearance hole, bolt and nut fasteners, and is the only configuration that would allow the use of a rotatable flange.

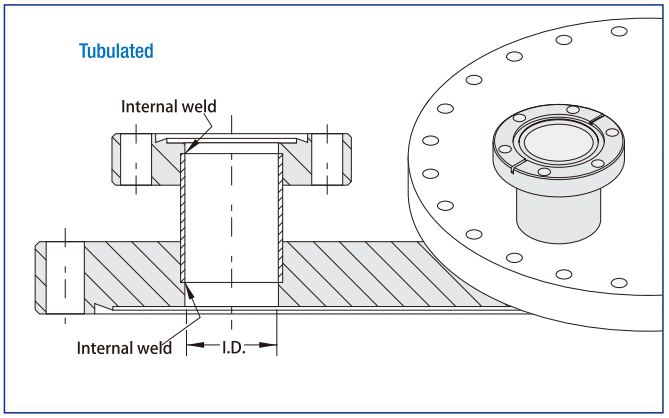

The most economical method of installing a flange would be to use standard off the shelf components requiring the minimum amount of modification and fabrication or in other words a top mounted method.In this method the larger flange or plate is bored to match the bore size of a smaller flange. Both are then joined by fusion welding internally along the interface between the two bored pieces,In some cases, external skip welds are provided for additional mechanical strength.
This is the most economical method of construction.

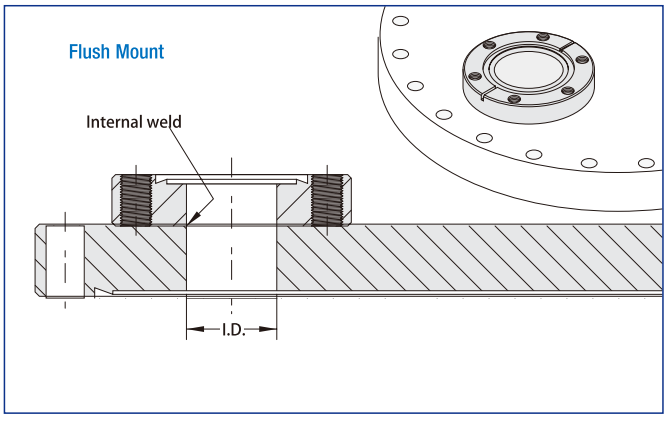

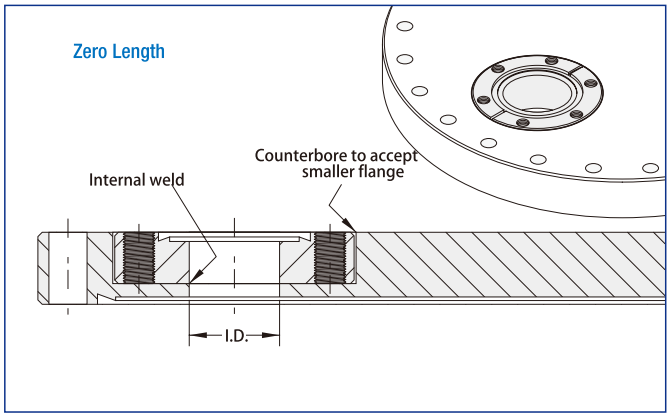

The zero length method of installation is similar to the top mount method with one exception, the larger flange or plate is counter bored to a depth that matches the thickness of the smallerflange. The counter-bore is used to reduce the overall thickness of the completed assembly and thus provides a zero length recessed profile.

The flanges are welded in the same fashion along the bore inside diameter. This approach provides a more aesthetic look at a reasonable cost.

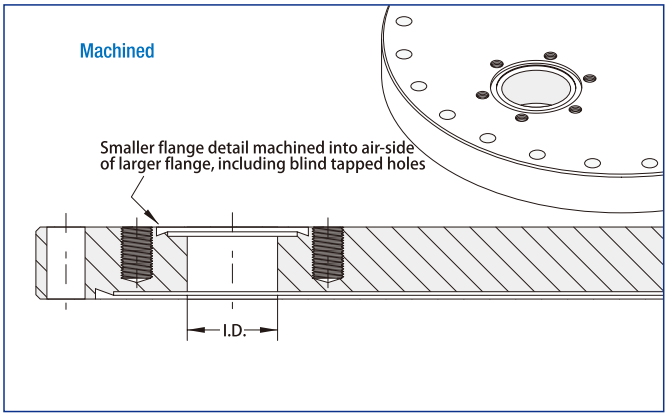

An integrally machined method eliminates all weld joints, but requires the most amount of machining. Special machining steps include the use of blind-tapping for all bolt holes and off-center turning of the knife-edge seal geometry as well as through bore operations. In some instances it may even be desirable to use helical thread inserts, since these would be easy to replace in the event a thread is damaged. Conventional threads would be very difficult to repair. This type of fabrication is the most aesthetic but also the most expensive of the threechoices.

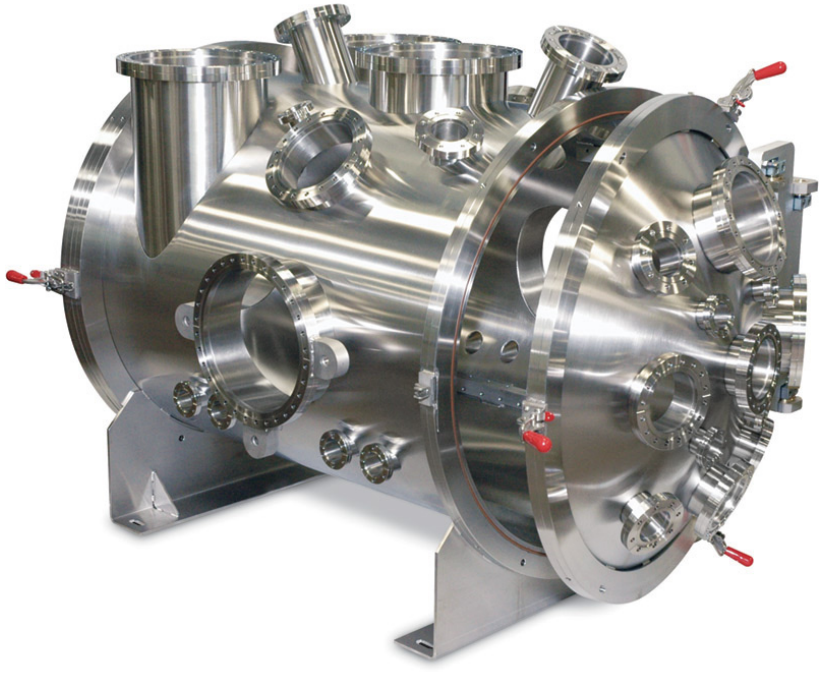

STEP 3

Specify application specific design considerations, A minimum set of criteria are provided here:

a. Material:Specify if other than 304L stainless steel.

b. **Main body wall thickness:** Specify if known or state"Standard"if Magnox should select the thickness."Standard"if Magnox

c. **Bolt hole orientation:** Specify, as shown in Figure I below, if known or state "standard" if Magnox should select the bolt hole orientation (for non-rotatable flanges). The orientation of leak check grooves on CF flanges should be indicated if critical.

Figure I

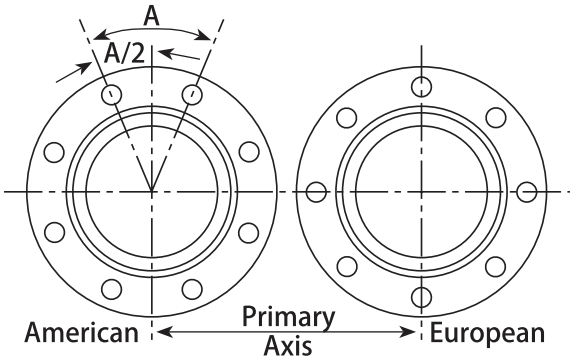

d. **Clamp and bolt kit clearances:** Be sure that tubulated flange mounts have the minimum clearances as shown in Table C & D below:

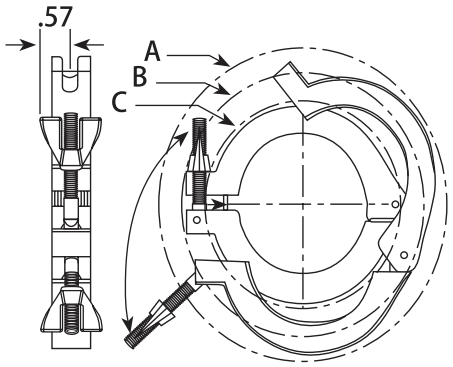

Table C -KF Clamp Clearance (in)

Flange Size	Min. Dia. Toinstall A	Max.dia Closed B	Min. Dia. Closed C
KF-10	2.86	2.65	1.75
KF-16	2.86	2.65	1.75
KF-25	3.32	3.00	2.24
KF-40	4.00	3.72	2.90
KF-50	5.45	4.62	3.69

e. **Tolerances:** Specify if known or state"Standard" if Magnox standard tolerances should be applied. Magnox's standard tolerances are provided in Table E.

Table E General Tolerances (mm)

	Dim	>0 ≤6	>6 ≤30	>30 ≤120	>120 ≤400	>400 ≤1000	>1000 ≤2000	>2000 ≤4000
机加工	精	±0.10	±0.10	±0.20	±0.20	±0.30	±0.50	
	普	±0.20	±0.20	±0.50	±0.50	±0.80	±1.20	±0.20
焊接	A	±1.00	±1.00	±1.00	±1.00	±2.00	±2.00	±4.00
	B	±1.00	±1.00	±2.00	±2.00	±3.00	±4.00	±6.00

f.Water-cooled jacketing: Magnox manufactures two styles of water-cooled chambers for high temperature or high heat flux applications:

1. Double-Wall Construction: Double-wall construction is most often used in those applications requiring uniform internal chamber temperatures. Typically, double-wall, water-cooled chambers are made with internal baffles that help provide uniform, laminar water circulation.

2. Channel Construction: Channel construction is most often used in those applications requiring localized or targeted cooling. Because it involves a fair amount of hand fitting work to install, channel construction is often more expensive than double-wall construction.

Double Wall Construction

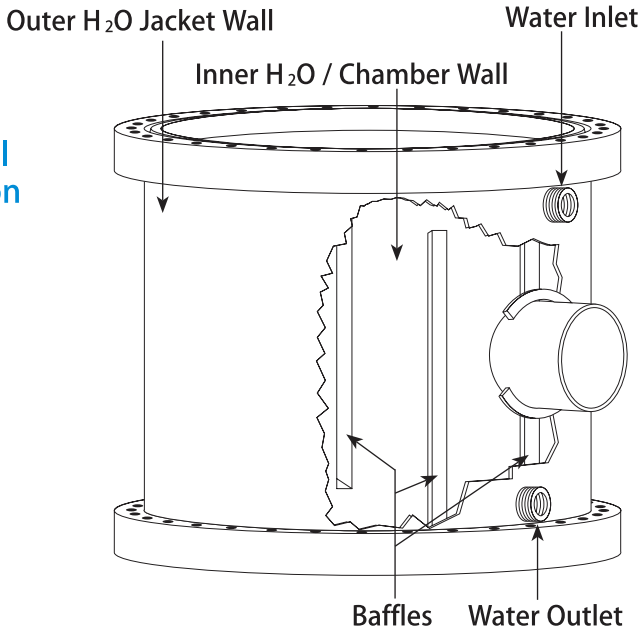

Channel Construction

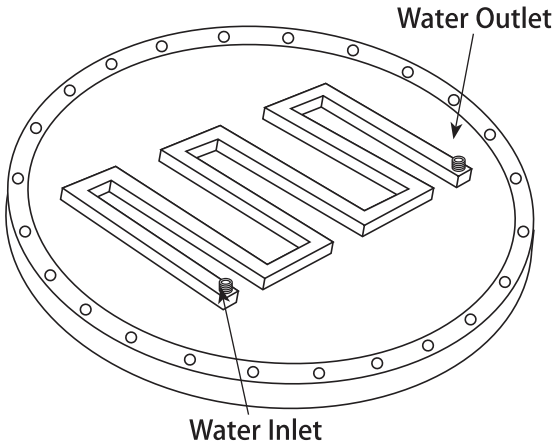

Fast Vacuum Pump Line Weldments

MAGNOX

We Know Vacuum!

Magnox is a dedicated vacuum manufacturer with over 15 years of experience.We are also outfitted with the state-of-the-art equipment necessary for high vacuum fabrication.

- XRF spectrometer material analysis
- AWS and ASME certified welders
- Coordinate measuring machine (CMM) for dimensional checks
- Helium mass spectrometer to check for leaks on all welds and sealing surfaces

Rapid Turnaround

When you need a non-standard product NOW, Magnox can deliver!

No Drawing Required

From concept to complete product, you will work directly with engineers and product specialists to design the exact product you need, when you need it.

One-stop Shop

No need to outsource subcomponents. Let Magnox provide complete supply chain partnership.

- Dedicated inventory management
- Rapid delivery scheduling



Rapid Turnaround onWeldments,Spools, and Fittings

Magnox has added a lean manufacturing cell dedicated to rapid turnaround of high and ultra-high vacuum weldments incorporating standardflanges, tubing, and fittings.

Magnox can fabricate components using non-standard dimensions and flange configurations per our customers specifcations.



Cell Capabilities:

Dedicated Machinery

- TIG welding (GTAW)
- Orbital welding
- CNC precision tube cutting
- Mechanical polishing & Electrolytic polishing
- IS0 Class 5 Cleanroom Cleaning and Packaging

Dedicated Inventory:

- Flanges (KF、CF、ISO & ASA)
- Tubing
- Weldable fittings

Material:

- 304、316L、316LV+V、C22、T20



O.D.Tube Finish:

- Surface Gade : BA、MP、EP
- Standard Ra≤0.8μm
- Finishes smoother than Ra 0.8μm available upon request.

Tube O.D.:

- Min.1/8"
- Max.10" or customize a larger size.

Dimensiona Tolerances :

Max. Envelope Dimension	>0 ≤400	>400 ≤2000	>2000 ≤4000
Overall Length	±1	±2	±4
Angles	±1°	±1°	±1°

We are capable of achieving even higher precision levels to meet your project needs. Feel free to contact us to discuss your requirements.

3 Fittings & Flanges

3.1 KF Series 58-65

3.2 ISO Series 66-75

3.3 CF Series 76-87

3.4 Adapter Fittings 88-95

3.5 Bellows & Flexible Hose 96-114

3.6 Welded Metal Bellows 115-121

3.7 Tube & Butt Weld Fittings 122-131



Vacuum Fittings-KF Series

真空配件-KF系列

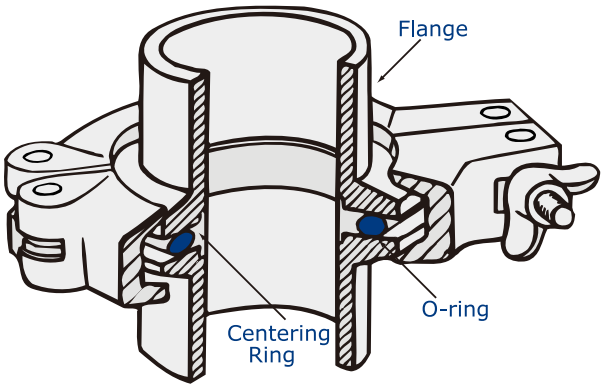

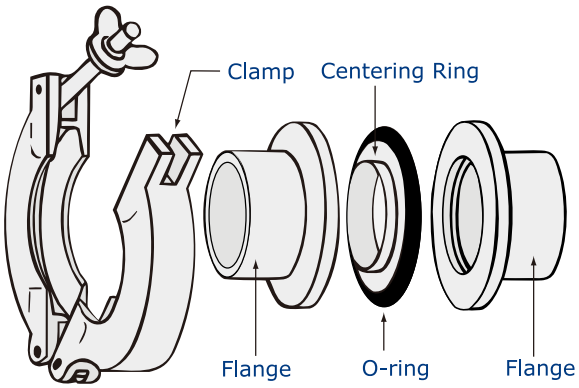









Specifications	
Blanks	:304(other material available upon request)
Flanges	:304(other material available upon request)
Fittings	:304(other material available upon request)
Clamps	:Aluminium
O Ring material	:Viton or NBR
Temperature Range	:150°(Viton)80°(NBR)
Vacuum Rate	:10^{-8} torr

Larger or special size available upon request

Diagram A

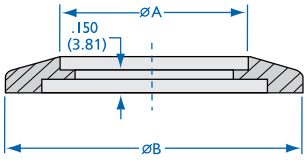

Bored Blank Flanges

Part Number	Flange Size	Dimensions, mm		
		Tube OD	A	B
66601-0050	KF10	12.70	12.95	29.97
66601-0075	KF16	19.05	19.30	29.97
66601-0100	KF25	25.40	25.65	40.01
66601-0150	KF40	38.10	38.35	54.86
66601-0200	KF50	50.80	51.05	74.93

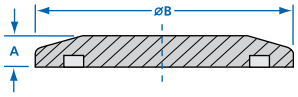

Blank Off Caps

Part Number	Flange Size	Dimensions, mm	
		A	B
66602-0050	KF10	5.08	29.97
66602-0075	KF16	5.08	29.97
66602-0100	KF25	5.08	40.01
66602-0150	KF40	5.08	54.86
66602-0200	KF50	5.08	74.93

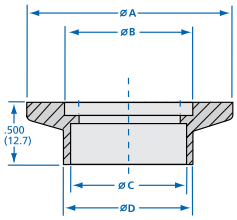

KF Socket Weld Flanges

Part Number	Flange Size	Dimensions, mm				
		Tube OD	A	B	C	D
66603-0050	KF10	12.70	29.97	12.19	12.95	15.49
66603-0075	KF16	19.05	29.97	17.27	19.30	20.27
66603-0100	KF25	25.40	40.01	26.19	25.65	28.96
66603-0150	KF40	38.10	54.86	41.15	38.35	41.66
66603-0200	KF50	50.80	74.93	52.32	51.05	54.36

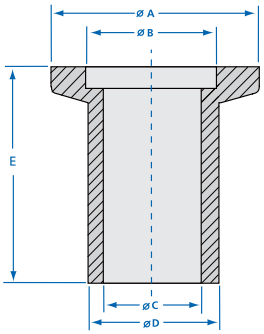

KF Butt Weld Neck Flanges

Part Number	Flange Size	Dimensions, mm				
		A	B	C	D	E
66604-0050	KF10	29.97	12.19	9.65	12.70	12.7/20/40
66604-0075	KF16	29.97	17.27	15.75	19.05	12.7/20/40
66604-0100	KF25	40.01	26.19	22.10	25.40	12.7/20/40
66604-0150	KF40	54.86	41.15	34.80	38.10	12.7/20/40
66604-0200	KF50	74.93	52.32	47.50	50.80	12.7/20/40

注：根据需求选择不同的长度，12.7mm物料代码为12；20mm物料代码为20，40mm物料代码为40.
例如若需长度为20mm的接头，物料号则表示为66604-0100-20

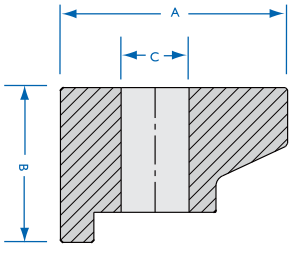

KF Single Claw Clamp

Part Number	Flange Size	Dimensions, mm		
		A	B	C
66630-1650	KF16-KF50	20.40	13.90	6.10

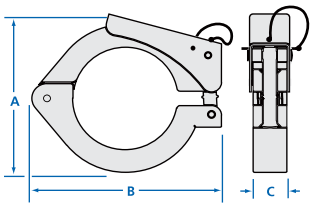

KF Sure Seal Clamps

Part Number	Flange Size	Dimensions, mm		
		A	B	C
66606-0075	KF16	41.00	62.30	16.50
66606-0100	KF25	54.00	72.54	16.50
66606-0150	KF40	69.00	89.70	16.50
66606-0200	KF50	96.11	107.82	21.23

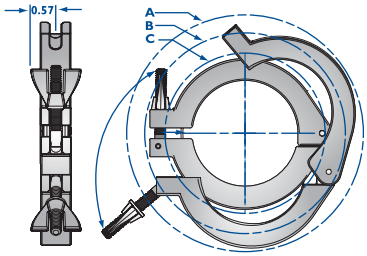

KF Clamp Clearance Details

Part Number	Flange Size	Max.dia To Install A	Max.dia Closed B	Min.dia Closed C
66607-0075	KF10/16	72.64	67.31	44.45
66607-0100	KF25	84.33	76.20	56.90
66607-0150	KF40	101.60	94.49	73.66
66607-0200	KF50	138.43	117.35	93.73

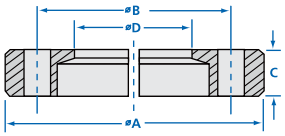

KF Bulkhead Clamps

Part Number	Flange Size	Dimensions, mm				
		A	B	C	Number Of Screws	Through Hole D
66608-0075	KF16	50.80	38.10	9.17	6	22.86
66608-0100	KF25	60.20	48.01	9.83	6	32.00
66608-0150	KF40	74.68	61.98	9.30	6	45.22
66608-0200	KF50	95.25	82.55	10.26	8	61.50

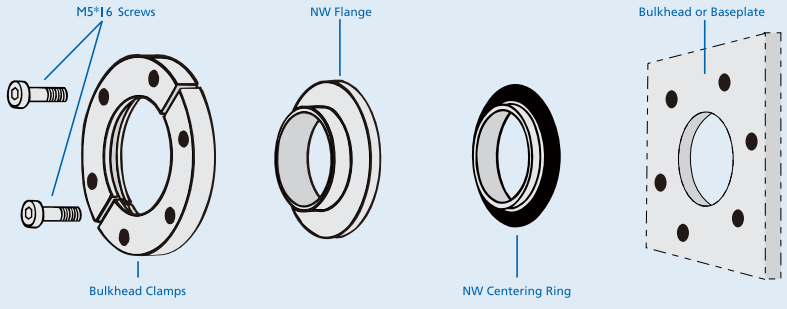

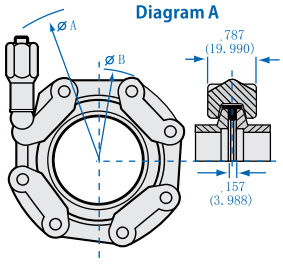

Chain Clamps for KF-16 to 63 Links

Part Number	Flange Size	Dimensions, mm	
		A	B
66626-0075	KF16	115.06	59.94
66626-0100	KF25	124.97	70.10
66626-0150	KF40	135.13	85.09
66626-0200	KF50	151.89	104.90
66626-0250	KF63	160.02	119.89

注：物料号默认材质为不锈钢304，若需求工程塑料材质，物料号后加-AB，如需铝合金材质，料号后加-AL。

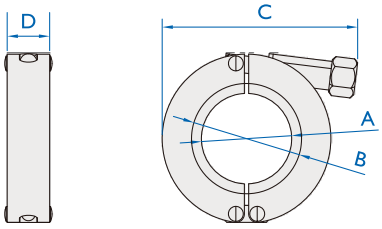

KF Short Weld Neck Flanges

Part Number	Flange Size	Dimensions, mm			
		A	B	C	D
66629-0075	KF10/16	25.40	30.80	68.00	15.90
66629-0100	KF25	34.12	40.94	80.63	15.90
66629-0150	KF40	49.40	55.70	87.20	15.90
66629-0200	KF50	69.00	75.60	109.30	15.90

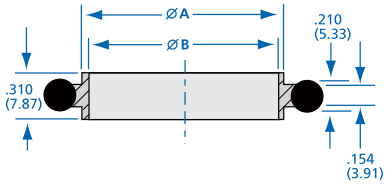

KF Stainless Steel Centering Rings with Viton O-ring

Part Number	Flange Size	O-ring Material	Dimensions, mm	
			A	B
66609-0050	KF10	Viton	12.14	11.58
66609-0075	KF16	Viton	16.99	15.88
66609-0100	KF25	Viton	26.01	24.99
66609-0150	KF40	Viton	41.00	39.88
66609-0200	KF50	Viton	51.99	49.96

注：O-RING默认材质为FKM(氟橡胶)，若需求FFKM(全氟醚)材质，在物料号后加-FF.

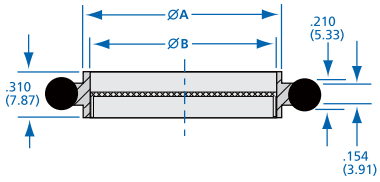

KF Screened Stainless Steel/Centering Rings with Viton O-ring

Part Number	Flange Size	O-ring Material	Dimensions, mm		Mesh
			A	B	
66610-0075	KF16	Viton	16.99	15.88	30
66610-0100	KF25	Viton	26.01	24.99	
66610-0150	KF40	Viton	41.00	39.88	
66610-0200	KF50	Viton	51.99	49.96	

注：O-RING默认材质为FKM(氟橡胶)，若需求FFKM(全氟醚)材质，在物料号后加-FF.

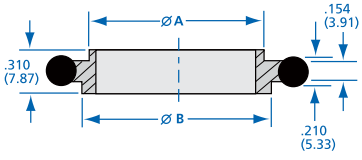

KF Screened Stainless Steel/Centering Rings with Viton O-ring

Part Number	Flange Size	O-ring Material	Dimensions, mm	
			A	B
66611-1016	KF10/16	Viton	12.19	17.02
66611-2025	KF20/25	Viton	22.10	25 91
66611-3240	KF32/40	Viton	34.04	40.89

注：O-RING默认材质为FKM(氟橡胶)，若需求FFKM(全氟醚)材质，在物料号后加-FF.

KF Screened Stainless Steel/Centering Rings with Viton O-ring

Part Number	Flange Size	O-ring Material	Dimensions, mm		
			A	B	Maximum Psig
66612-0050	KF16	Viton	30	15.88	100
66612-0100	KF25	Viton	40	24.99	100
66612-0150	KF40	Viton	55	39.88	75
66612-0200	KF50	Viton	75	49.96	50

注：O-RING默认材质为FKM(氟橡胶)，若需求FFKM(全氟醚)材质，在物料号后加-FF.

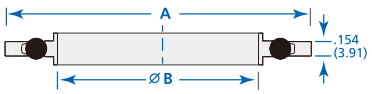

KF Screened Stainless Steel/Centering Rings with Viton O-ring

Part Number	Flange Size	O-ring Material	Dimensions, mm			
			A	B	C	Maximum Psig
66613-0050	KF16	Viton	29.97	16.00	23.11	100
66613-0100	KF25	Viton	40.13	24.13	33.02	100
66613-0150	KF40	Viton	55.12	40.13	48.01	75
66613-0200	KF50	Viton	74.93	50.04	58.93	50

注：O-RING默认材质为FKM(氟橡胶)，若需求FFKM(全氟醚)材质，在物料号后加-FF.

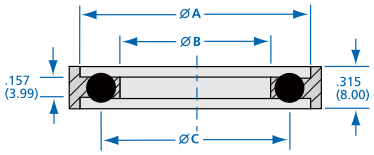

KF Full Nipples

Part Number	Flange Size	Dimensions, mm	
		Tube OD	A
66628-0050	KF10	12.70	100/0ption
66628-0075	KF16	19.05	100/0ption
66628-0100	KF25	25.40	100/0pion
66628-0150	KF40	38.10	100/0ption
66628-0200	KF50	50.80	100/0ption

注：可按照需求定制任意长度。例如，需定制KF25 L=750mm，订购号为66828-0100-0750

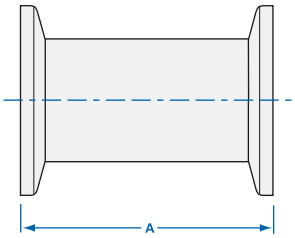

KF Reducer Nipples

Part Number	Flange Size	Dimensions, mm			
		Flange 1	Flange 2	Tube OD	A
66614-1610	KF16*KF10	KF16	KF10	12.70	28.00
66614-2510	KF25*KF10	KF25	KF10	12.70	28.00
66614-2516	KF25*KF16	KF25	KF16	19.05	28.00
66614-4010	KF40*KF10	KF40	KF10	12.70	28.00
66614-4016	KF40*KF16	KF40	KF16	19.05	28.00
66614-4025	KF40*KF25	KF40	KF25	25.40	28.00
66614-5010	KF50*KF10	KF50	KF10	12.70	28.00
66614-5016	KF50*KF16	KF50	KF16	19.05	28.00
66614-5025	KF50*KF25	KF50	KF25	25.40	28.00
66614-5040	KF50*KF40	KF50	KF40	38.10	28.00

注：默认长度为28mm，可根据需求定制任意长度。如需求长KF40*KF25 K=750mm，物料号为66615-4025-0750

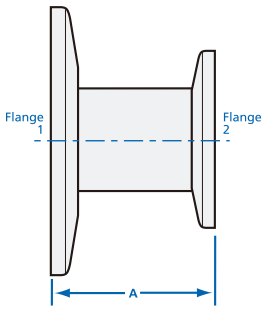

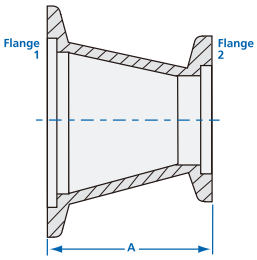

KF Reducer Nipples

Part Number	Flange Size	Dimensions, mm		
		Flange 1	Flange 2	A
66615-2516	KF25*KF16	KF25	KF16	28.0/40
66615-4016	KF40*KF16	KF40	KF16	28.0/40
66615-4025	KF40"KF25	KF40	KF25	28.0/40
66615-5016	KF50*KF16	KF50	KF16	28.0/40
66615-5025	KF50*KF25	KF50	KF25	28.0/40
66615-5040	KF50*KF40	KF50	KF40	28.0/40

注：提供28mm和40mm两种长度，根据需求在物料号后加对应的长度，如需求长KF40*KF25 40mm长度，物料号为66615-4025-40

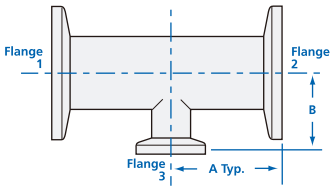

KF Reducer Nipples

Part Number	Flange Size	Dimensions, mm			
		Tube 1 &2 Arm OD	Tube 3 Leg OD	A	B
66616-2516	KF25*KF16	25.40	19.05	50	40
66616-4016	KF40*KF16	38.10	19.05	65	40
66616-4025	KF40*KF25	38.10	25.40	65	50
66616-5016	KF50*KF16	50.80	19.05	70	40
66616-5025	KF50*KF25	50.80	25.40	70	50
66616-5040	KF50*KF40	50.80	38.10	70	65

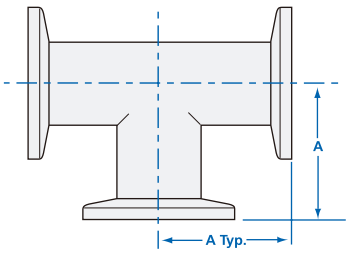

KF Tees

Part Number	Flange Size	Dimensions, mm	
		Tube OD	A
66617-0050	KF10	12.70	31.75
66617-0075	KF16	19.05	29.21
66617-H075	KF16	19.05	40.00
66617-0100	KF25	25.40	50.00
66617-H100	KF25	25.40	51.56
66617-0150	KF40	38.10	60.96
66617-H150	KF40	38.10	65.02
66617-0200	KF50	50.80	70.10
66617-H200	KF50	50.80	80.01

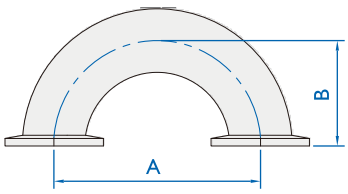

KF 180°Radius Elbows

Part Number	Flange Size	Dimensions, mm		
		Tube OD	A	B
66630-0075	KF16	19.05	57.20	32.40
66630-0100	KF25	25.40	76.20	41.90
66630-0150	KF40	38.10	114.40	61.00
66630-0200	KF50	50.80	152.40	80.00

KF 45° Radius Elbows

Part Number	Flange Size	Dimensions, mm	
		Tube OD	A
66618-0075	KF16	19.05	15.65
66618-0100	KF25	25.40	19.56
66618-0150	KF40	38.10	27.43
66618-0200	KF50	50.80	35.31

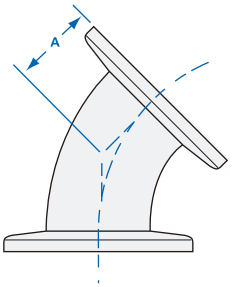

KF 45° Radius Elbows with Tangents

Part Number	Flange Size	Dimensions, mm	
		Tube OD	A
66619-0075	KF16	19.05	23.11
66619-0100	KF25	25.40	33.80
66619-0150	KF40	38.10	42.67
66619-0200	KF50	50.80	50.55

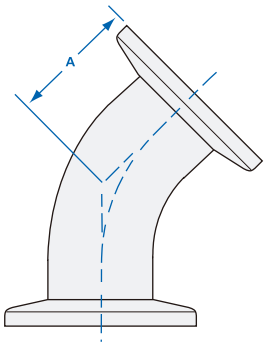

KF 90° Radius Elbows

Part Number	Flange Size	Dimensions, mm		
		Tube OD	A	B
66620-0050	KF10	12.70	31.75	19.05
66620-0075	KF16	19.05	32.40	28.60
66620-0100	KF25	25.40	41.91	38.10
66620-0150	KF40	38.10	60.96	57.15
66620-H150	KF40	38.10	65.02	57.15
66620-HL150	KF40	38.10	130.05	57.15
66620-0200	KF50	50.80	80.01	76.20
66620-HL200	KF50	50.80	139.95	76.20

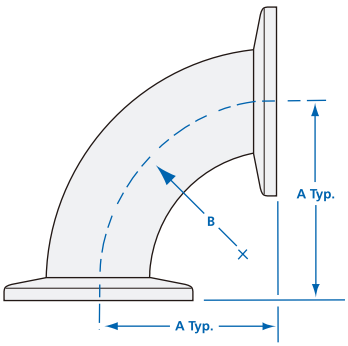

KF 90° Mitered Elbows

Part Number	Flange Size	Dimensions, mm	
		Tube OD	A
66621-0075	KF16	19.05	29.21
66621-0100	KF25	25.40	51.56
66621-0150	KF40	38.10	60.96
66621-H150	KF40	38.10	65.02
66621-0200	KF50	50.80	80.01
66621-H200	KF50	50.80	70.10

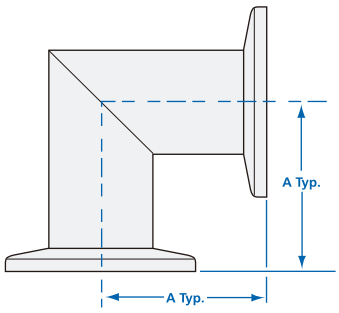

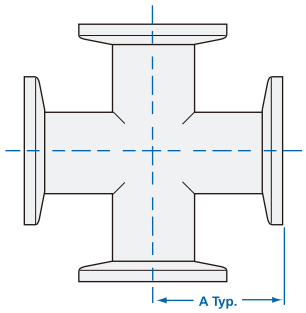

KF 4-Way Crosses

Part Number	Flange Size	Dimensions, mm	
		Tube OD	A
66622-0050	KF10	12.70	31.75
66622-0075	KF16	19.05	29.21
66622-0100	KF25	25.40	51.56
66622-0150	KF40	38.10	60.96
66622-H150	KF40	38.10	65.02
66622-0200	KF50	50.80	70.10
66622-H200	KF50	50.80	80.01

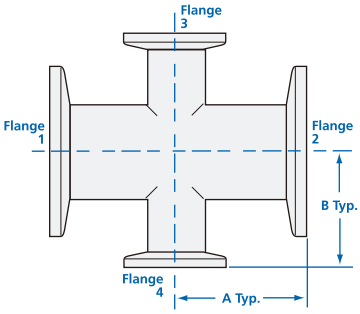

KF 4-Way Crosses

Part Number	Flange Size	Dimensions, mm			
		Tube 1 & 2 OD	Tube 3 & 4 OD	A	B
66623-2516	KF25*KF16	25.40	19.05	50.00	43.20
66623-4016	KF40*KF16	38.10	19.05	65.00	49.50
66623-4025	KF40*KF25	38.10	25.40	65.00	56.40
66623-5016	KF50*KF16	50.80	19.05	70.00	55.90
66623-5025	KF50*KF25	50.80	25.40	70.00	62.70
66623-5040	KF50*KF40	50.80	38.10	70.00	71.40

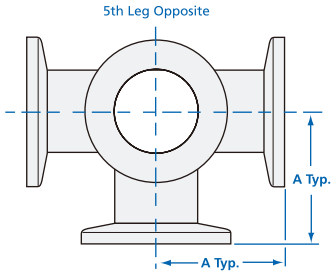

KF 5-Way Crosses

Part Number	Flange Size	Dimensions, mm	
		Tube OD	A
66624-0075	KF16	19.05	29.21
66624-0100	KF25	25.40	51.56
66624-0150	KF40	38.10	60.96
66624-0200	KF50*	50.80	80.01

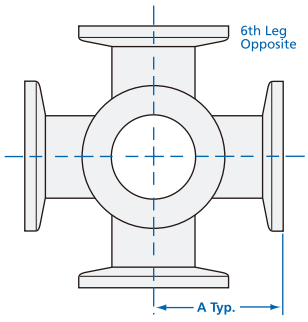

KF 6-Way Crosses

Part Number	Flange Size	Dimensions, mm	
		Tube OD	A
66625-0075	KF16	19.05	29.21
66625-0100	KF25	25.40	51.56
66625-0150	KF40	38.10	60.96
66625-0200	KF50*	50.80	80.01

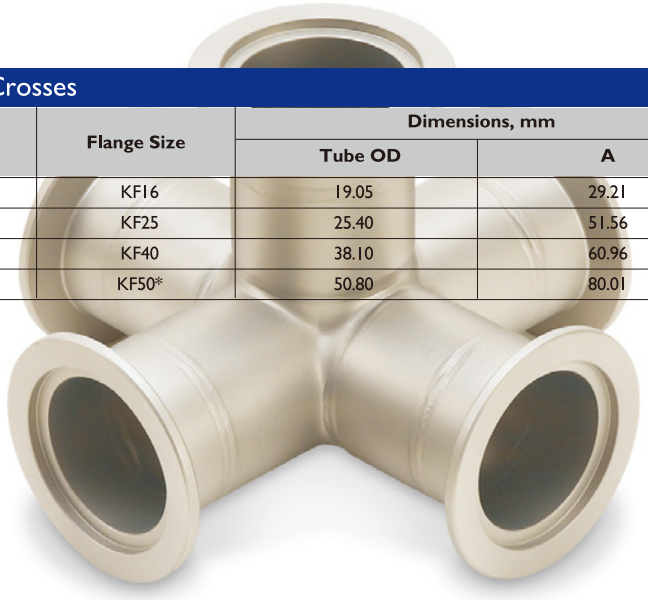



Vacuum Fittings-ISO Series

真空配件-ISO系列

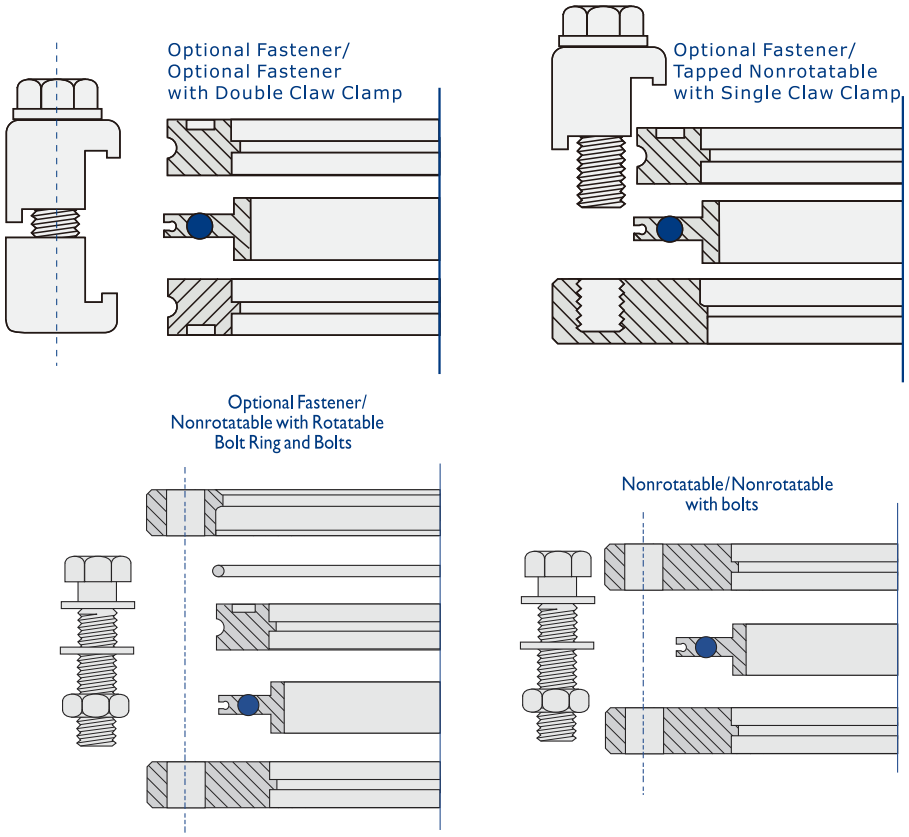



Specifications	
Blanks&Flanges	:304(other material available upon request)
Retainer Rings	:304(other material available upon request)
Centerings	:304(other material available upon request)
Clamps	:Aluminium
Outer Rings	:Aluminium
O Ring material	:Viton or NBR
Temperature Range	:150°(Viton)80°(NBR)
Vacuum Rate	:10^{-8} torr

Larger or special size available upon request

Diagram A

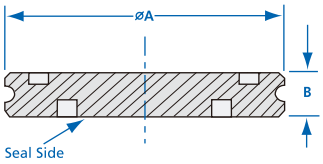

Diagram B

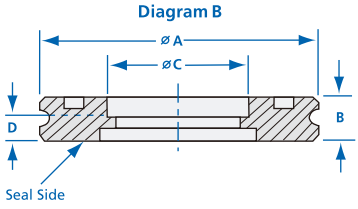

ISO Optional Fastener Flanges

Part Number	Flange Size	Dimensions, mm					
		Diagam	Nominal Id	A	B	C	D
66101-0250	ISO-63	A	-	95.00	11.94	-	-
66102-0250	ISO-63	B	63.50	95.00	11.94	63.75	6.35
66101-0300	ISO-80	A	-	110.01	11.94	-	-
66102-0300	ISO-80	B	76.20	110.01	11.94	76.45	6.35
66101-0400	ISO-100	A	-	130.00	11.94	-	-
66102-0400	ISO-100	B	101.60	130.00	11.94	101.85	6.35
66101-0600	ISO-160	A	-	180.00	11.94	-	-
66102-0600	ISO-160	B	152.40	180.01	11.94	152.91	9.53
66101-0800	ISO-200	A	-	240.00	11.94	-	-
66102-0800	ISO-200	B	203.20	240.00	11.94	203.71	9.53
66101-1000	ISO-250	A	-	289.99	11.94	-	-
66102-1000	ISO-250	B	254.00	289.99	11.94	254.51	9.53
66101-1200	ISO-320	A	-	370.00	17.02	-	-
66102-1200	ISO-320	B	304.80	370.00	17.02	305.31	9.53
66101-1600	ISO-400	A	-	449.99	17.02	-	-
66102-1600	ISO-400	B	406.40	449.99	17.02	406.91	9.53
66101-2000	ISO-500	A	-	549.99	17.02	-	-
66102-2000	ISO-500	B	508.00	549.99	17.02	508.51	9.53

注：B视图焊接法兰可向下配合不同规格管道，如ISO63法兰需配合焊接管为1.5寸时。
物料号则表示为66102-0250-0150.



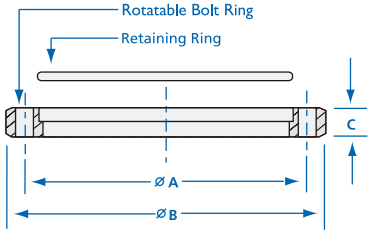

ISO Rotatable Bolt Ring and Retainer Ring

Part Number	Flange Size	Dimensions, mm		
		A	B	C
66103-0250	ISO-63	110.01	130.00	11.99
66103-0300	ISO-80	124.99	145.01	11.99
66103-0400	ISO-100	145.01	165.00	11.99
66103-0600	ISO-160	200.00	224.99	16.00
66103-0800	ISO-200	259.99	284.99	16.00
66103-1000	ISO-250	310.01	335.00	16.00
66103-1200	ISO-320	395.00	424.99	19.99
66103-1600	ISO-400	480.01	510.01	19.99
66103-2000	ISO-500	580.01	610.01	19.99



Replacement Retainer Ring

Part Number	Flange Size
66125-0250	ISO-63
66125-0300	ISO-80
66125-0400	ISO-100
66125-0600	ISO-160
66125-0800	ISO-200
66125-1000	ISO-250
66125-1200	ISO-320
66125-1600	ISO-400
66125-2000	ISO-500

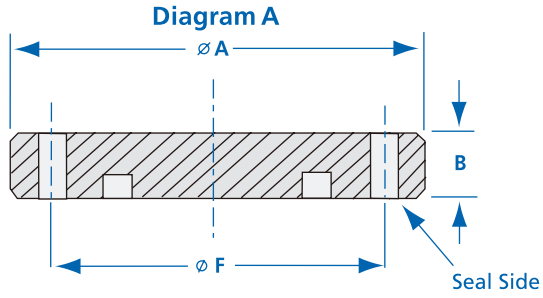

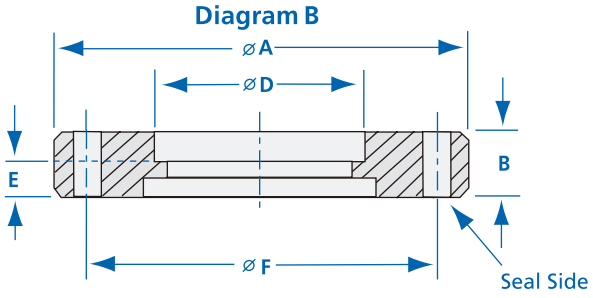

ISO Nonrotatable Flanges

Part Number	Flange Size	Diagam	Nominal Id	Dimensions, mm							
				A	B		D	E	F	Bolt Holes	Bolt Diameter
66104-0250	ISO-63	A	-	130.00	11.94		-	-	110.01	110.01	110.01
66105-0250	ISO-63	B	63.50	130.00	11.94		63.75	6.35	110.01	110.01	110.01
66104-0300	ISO-80	A	-	145.01	11.94		-	-	124.99	124.99	124.99
66105-0300	ISO-80	B	88.90	145.01	11.94		76.45	6.35	124.99	124.99	124.99
66104-0400	ISO-100	A	-	165.00	11.94		-	-	145.01	145.01	145.01
66105-0400	ISO-100	B	101.60	165.00	11.94		101.85	6.35	145.01	145.01	145.01
66104-0600	ISO-160	A	-	224.99	16.00		-	-	200.00	200.00	200.00
66105-0600	ISO-160	B	152.40	224.99	16.00		152.91	9.53	200.00	200.00	200.00
66104-0800	ISO-200	A	-	284.99	16.00		-	-	259.99	259.99	259.99
66105-0800	ISO-200	B	203.20	284.99	16.00		203.71	9.53	259.99	259.99	259.99
66104-1000	ISO-250	A	-	335.00	16.00		-	-	310.01	310.01	310.01
66105-1000	ISO-250	B	254.00	335.00	16.00		254.51	9.53	310.01	310.01	310.01
66104-1200	ISO-320	A	-	424.99	17.02		-	-	395.00	395.00	395.00
66105-1200	ISO-320	B	304.80	424.99	17.02		305.31	9.53	395.00	395.00	395.00
66104-1600	ISO-400	A	-	510.01	17.02		-	-	480.01	480.01	480.01
66105-1600	ISO-400	B	406.40	510.01	17.02		406.91	9.53	480.01	480.01	480.01
66104-2000	ISO-500	A	-	610.01	17.02		-	-	580.01	580.01	580.01
66105-2000	ISO-500	B	508.00	610.01	17.02		508.51	9.53	580.01	580.01	580.01

注：B视图焊接法兰可向下配合不同规格管道，如ISO63法兰需配合焊接管为1.5寸时。物料号则表示为66105-0250-0150.



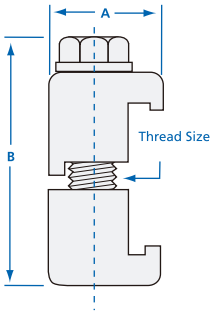

ISO Double Claw Aluminum Clamps

Part Number	Flange Size	Dimensions, mm	
		A	B
66106-063100	ISO63-ISO100	23.88	49.78
66106-160250	ISO160-ISO250	27.94	49.78
66106-320500	ISO320-ISO500	34.04	63.50

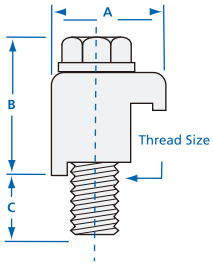

ISO Single Claw Aluminum Clamps - Metric

Part Number	Flange Size	Dimensions, mm			
		A	B	C	Metric Thread Size
66107-063100	ISO63-ISO100	23.88	22.50	10.16	M8x1.25
66107-160250	ISO160-ISO250	27.94	23.50	10.16	M10x1.50
66107-320500	ISO320-ISO500	34.04	30.00	20.07	M12x1.75

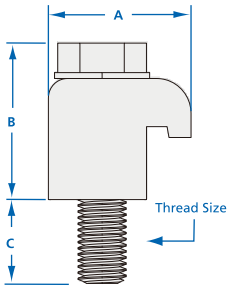

ISO Single Claw Aluminum Clamps - Metric

Part Number	Flange Size	Dimensions, mm				
		A	B	C	Metric Thread Size	Clamps Required
66127-063100	ISO63-ISO100	23.88	30.48	10.16	M8x1.25	4
66127-160250	ISO160-ISO250	27.94	30.48	10.16	M10x1.50	8
66127-320500	ISO320-ISO500	34.04	37.59	20.07	M12x1.75	12

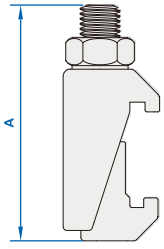

ISO Double Claw Stainless Steel Clamps

Part Number	Flange Size	Dimensions, mm	
		A	Bolt Size
66126-063250	ISO63-ISO250	60.00	M10
66126-320500	ISO320-ISO500	76.50	M12

备注 ： 物料号默认材质为不锈钢304，如需碳钢镀锌材质，物料号后加-CS

ISO Aluminum Centering Rings/With O-ring and Aluminum Spacer Ring

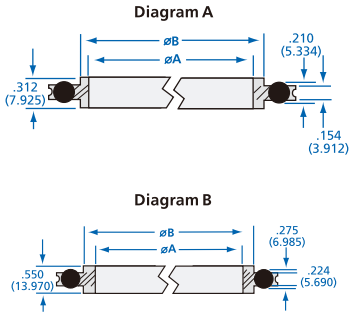

Part Number	Flange Size	Dimensions, mm			
		Diagram	O-ring Material	A	B
66108-0250	ISO-63	A	Viton	66.80	69.60
66108-0300	ISO-80	A	Viton	79.76	82.55
66108-0400	ISO-100	A	Viton	98.81	101.60
66108-0600	ISO-160	A	Viton	149.86	152.65
66108-0800	ISO-200	A	Viton	209.80	212.60
66108-1000	ISO-250	A	Viton	257.56	260.35
66108-1200	ISO-320	B	Viton	312.93	317.75
66108-1600	ISO-400	B	Viton	394.97	400.05
66108-2000	ISO-500	B	Viton	496.06	500.89

注：O-RING默认材质为FKM(氟橡胶)，若需求FFKM(全氟醚)材质，在物料号后加-FF.

ISO Screened Stainless Steel Centering Rings with O-ring and Aluminum Spacer Ring

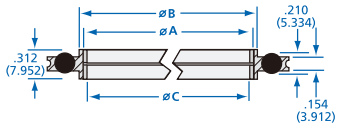

Part Number	Flange Size	Dimensions, mm			
		A	B	C	MESH (sg./in.)
66109-0250	ISO-63	66.80	69.60	60.45	16
66109-0300	ISO-80	79.76	82.55	72.90	16
66109-0400	ISO-100	98.81	101.60	88.90	16
66109-0600	ISO-160	149.86	152.65	139.70	16

注：O-RING默认材质为FKM(氟橡胶)，若需求FFKM(全氟醚)材质，在物料号后加-FF.

NW Flanges

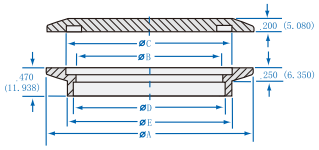

Part Number	Flange Size	Dimensions, mm				
		A	B	C	D	E
66123-0250	NW63 Socket Flange	87.12	61.98	70.10	63.75	68.83
66124-0250	NW63 Blank	87.12	-	70.10	-	-
66123-0300	NW80 Socket Flange	114.05	72.90	83.06	76.45	97.03
66124-0300	NW80 Blank	114.05	-	83.06	-	-
66123-0400	NW100 Socket Flange	134.11	98.30	102.11	101.85	117.09
66124-0400	NW100 Blank	134.11	-	102.11	-	-
66123-0600	NW160 Socket Flange	190.00	98.30	153.00	152.90	168.90
66124-0600	NW160 Blank	190.00	-	153.00	-	-

Chain Clamps for NW-80 to 160 Flanges

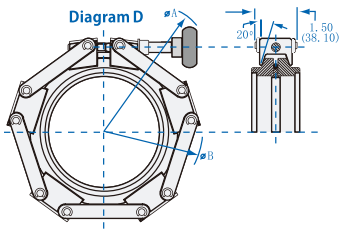

Part Number	Flange Size	Dimensions, mm	
		A	B
66828-0300	NW-80	244.09	153.92
66828-0400	NW-100	256.03	171.96
66828-0600	NW-160	273.08	231.70

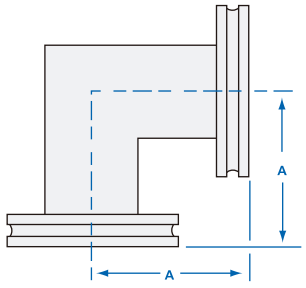

ISO 90 Mitered Elbows

Part Number	Flange Size	Dimensions, mm	
		Tube OD	A
66110-0250	ISO-63	63.50	82.55
66110-0300	ISO-80	76.20	88.90
66110-0400	ISO-100	101.60	104.90
66110-0600	ISO-160	152.40	136.65
66110-0800	ISO-200	203.20	187.45
66110-1000	ISO-250	254.00	250.95

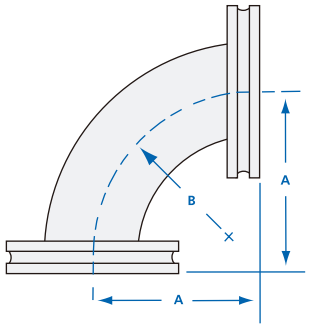

ISO 90° Radius Elbows

Part Number	Flange Size	Dimensions, mm		
		Tube OD	A	B
66111-0250	ISO-63	63.50	101.60	95.25
66111-0300	ISO-80	76.20	120.65	114.30
66111-0400	ISO-100	101.60	158.75	152.40
66111-0600	ISO-160	152.40	234.90	228.60
66111-0800	ISO-200	203.20	311.10	304.80
66111-1000	ISO-250	254.00	387.10	381.00

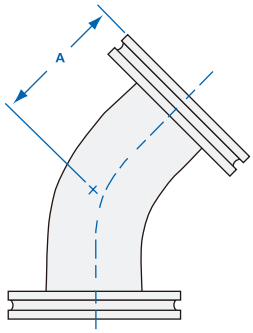

ISO 45° Elbows with Tangents

Part Number	Flange Size	Dimensions, mm	
		Tube OD	A
66112-0250	ISO-63	63.50	82.55
66112-0300	ISO-80	76.20	99.82
66112-0400	ISO-100	101.60	128.50

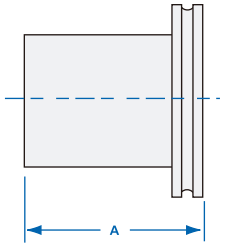

ISO Half Nipples

Part Number	Flange Size	Dimensions, mm	
		Tube OD	A
66113-0250	ISO-63	63.50	100/OPTION
66113-0300	ISO-80	76.20	100/OPTION
66113-0400	ISO-100	101.60	100/OPTION
66113-0600	ISO-160	152.40	100/OPTION
66113-0800	ISO-200	203.20	100/OPTION
66113-1000	ISO-250	254.00	100/OPTION
66113-1200	ISO-320	304.80	100/OPTION
66113-1600	ISO-400	406.40	100/OPTION
66113-2000	ISO-500	508.00	100/OPTION

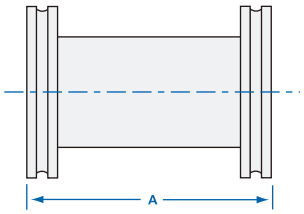

ISO Full Nipples

Part Number	Flange Size	Dimensions, mm	
		Tube OD	A
66114-0250	ISO-63	63.50	100/OPTION
66114-0300	ISO-80	76.20	100/OPTION
66114-0400	ISO-100	101.60	100/OPTION
66114-0600	ISO-160	152.40	100/OPTION
66114-0800	ISO-200	203.20	100/OPTION
66114-1000	ISO-250	254.00	100/OPTION
66114-1200	ISO-320	304.00	100/OPTION
66114-1600	ISO-400	406.00	100/OPTION
66114-2000	ISO-500	508.00	100/OPTION

注：可按照需求定制任意长度。例如，据定制ISO63 L=750mm,订购号为66114-0250-0750

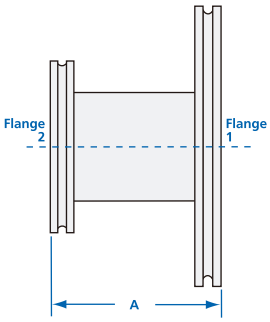

ISO Reducer Nipples

Part Number	Dimensions, mm			
	Flange 1	Flange 2	Tube OD	A
66115-080063	ISO-80	ISO-63	63.50	76.2/OPTION
66115-100063	ISO-100	ISO-63	63.50	
66115-100080	ISO-100	ISO-80	76.20	
66115-160063	ISO-160	ISO-63	63.50	
66115-160080	ISO-160	ISO-80	76.20	
66115-160100	ISO-160	ISO-100	101.60	
66115-200063	ISO-200	ISO-63	63.50	
66115-200080	ISO-200	ISO-80	76.20	
66115-200100	ISO-200	ISO-100	101.60	
66115-200160	ISO-200	ISO-160	152.40	
66115-250063	ISO-250	ISO-63	63.50	
66115-250080	ISO-250	ISO-80	76.20	
66115-250100	ISO-250	ISO-100	101.60	
66115-250160	ISO-250	ISO-160	152.40	
66115-250200	ISO-250	ISO-200	203.20	

注：可按照需求定制任意长度。例如，需定制ISO80*ISO63 L=750mm,订购号为66115-080063-0750

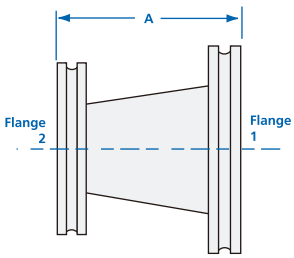

ISO Conical Reducer Nipples

Part Number	Dimensions, mm				
	Flange 1		Flange 2		A
	Type	Tube OD	Type	Tube OD	
66116-080063	ISO-80	76.2	ISO-63	63.50	104.65
66116-100063	ISO-100	101.6	ISO-63	63.50	104.65
66116-100080	ISO-100	101.6	ISO-80	76.20	104.65

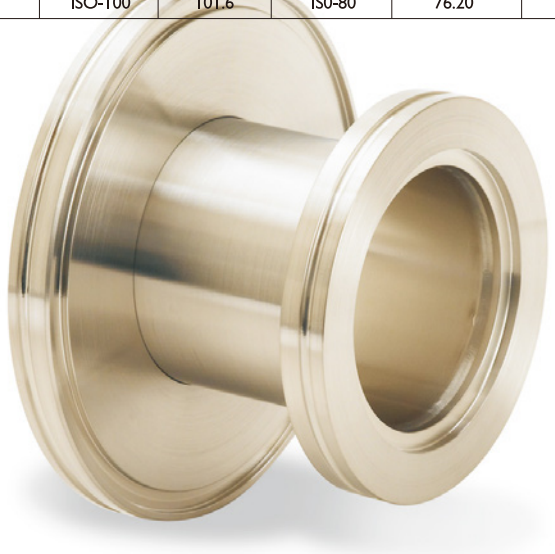

ISO Equal Tee

Part Number	Flange Size	Dimensions, mm	
		Tube OD	A
66117-0250	ISO-63	63.50	82.55
66117-0300	ISO-80	76.20	88.90
66117-0400	ISO-100	101.60	104.90
66117-0600	ISO-160	152.40	133.30
66117-0800	ISO-200	203.20	187.45
66117-1000	ISO-250	254.00	250.95

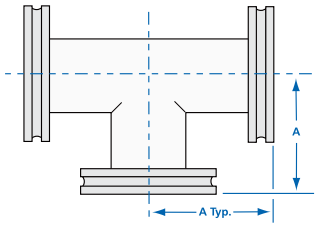

ISO Reducer Tees

Part Number	Dimensions, mm					
	Flange 1 & 2		Flange 3		A	B
	Type	Arm OD	Type	Leg OD		
66118-080063	ISO-80	76.20	ISO-63	63.50	88.90	88.90
66118-100063	ISO-100	101.6	ISO-63	63.50	104.90	101.60
66118-100080	ISO-100	101.6	ISO-80	76.20	104.90	101.60
66118-160063	ISO-160	152.4	ISO-63	63.50	133.30	127.00
66118-160080	ISO-160	152.4	ISO-80	76.20	133.30	127.00
66118-160100	ISO-160	152.4	ISO-100	101.60	133.30	130.30
66118-200063	ISO-200	203.2	ISO-63	63.50	187.45	152.40
66118-200080	ISO-200	203.2	ISO-80	76.20	187.45	158.70
66118-200100	ISO-200	203.2	ISO-100	101.60	187.45	162.00
66118-200160	ISO-200	203.2	ISO-160	152.40	187.45	168.35

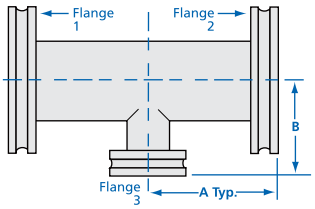

ISO 4-Way Crosses

Part Number	Flange Size	Dimensions, mm	
		Tube OD	A
66119-0250	ISO-63	63.50	82.55
66119-0300	ISO-80	76.20	88.90
66119-0400	ISO-100	101.60	104.90
66119-0600	ISO-160	152.40	133.30
66119-0800	ISO-200	203.20	187.45
66119-1000	ISO-250	254.00	250.95

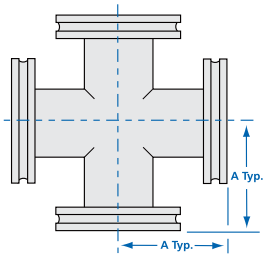

ISO 6-Way Crosses

Part Number	Flange Size	Dimensions, mm	
		Tube OD	A
66122-0250	ISO-63	63.50	82.55
66122-0300	ISO-80	76.20	88.90
66122-0400	ISO-100	101.60	104.90
66122-0600	ISO-160	152.40	133.30
66122-0800	ISO-200	203.20	187.45
66122-1000	ISO-250	254.00	250.95

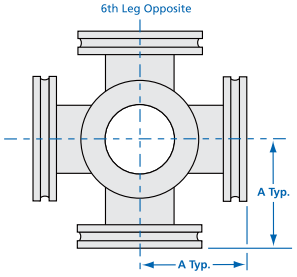

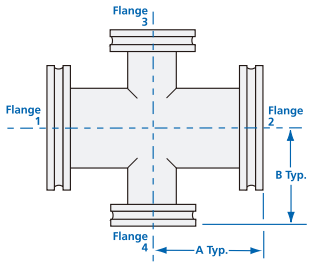

ISO 4-Way Reducer Crosses

Part Number	Dimensions, mm					
	Flange 1 & 2		Flange 3		A	B
	Type	Arm OD	Type	Leg OD		
66120-080063	ISO-80	76.20	ISO-63	63.50	88.90	88.90
66120-100063	ISO-100	101.60	ISO-63	63.50	104.90	101.60
66120-100080	ISO-100	101.60	ISO-80	76.20	104.90	101.60
66120-160063	ISO-160	152.40	ISO-63	63.50	133.30	127.00
66120-160080	ISO-160	152.40	ISO-80	76.20	133.30	127.00
66120-200100	ISO-200	152.40	ISO-100	101.60	133.30	130.30
66120-250160	ISO-250	254.00	ISO-160	152.40	187.45	162.05

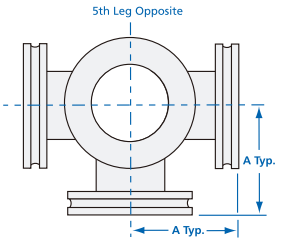

ISO 5-Way Crosses

Part Number	Flange Size	Dimensions, mm	
		Tube OD	A
66121-0250	ISO-63	63.50	82.55
66121-0300	ISO-80	76.20	88.90
66121-0400	ISO-100	101.60	104.90
66121-0600	ISO-160	152.40	133.30
66121-0800	ISO-200	203.20	187.45
66121-1000	ISO-250	254.00	250.95

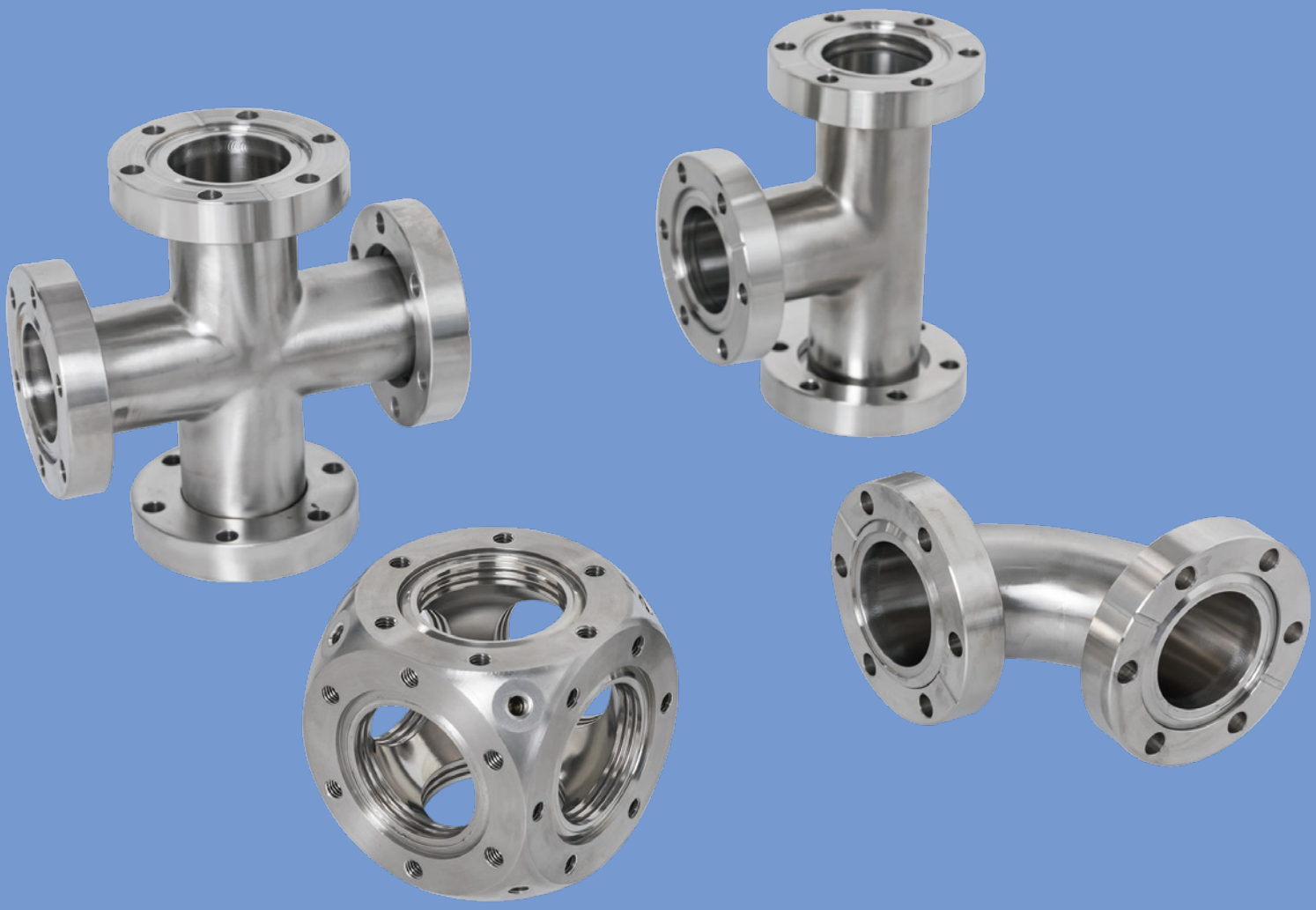

Vacuum Fittings-CF Series

真空配件-CF系列

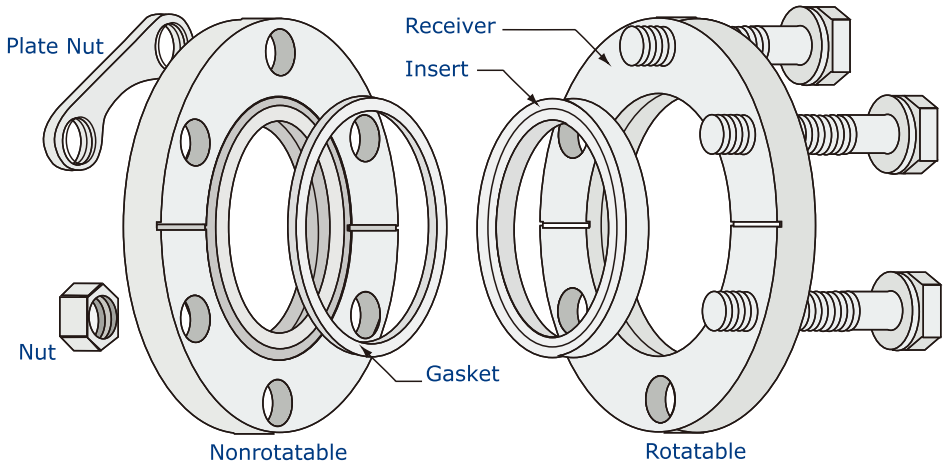



Specifications	
Blanks&Flanges	:304(other material available upon request)
Gaskets	:OFHC Copper or Viton
Bolt	:304
O Ring material	:OFHC Copper Or Slver Plated
Temperature Range	:-200°~450°(OFHC Copper)
Vacuum Rate	:10-13 torr
Torque Rating	:CF35 and smller 220 kgf-cm CF63 and langer 360 kgf-cm

注：本系列所有物料号默认为通孔法兰，若需求公制螺纹孔物料号后-MT；英制螺纹孔物料号后-IT

CF Double-Sided Special Purpose Flanges

66311	—	0275	—	4	VM	—	2

型号	
66311	双面侧装法兰

尺寸规格	
0133	CF16
0275	CF35
0338	CF50

端口规格		端口类型	
2	1/8"	TW	TUBE
4	1/4"	SW	LOK
6	3/8"	VM	Male VCR
8	1/2"	VF	Fmale VCR
		OF	Fmale VCO
		OM	Male VCO
		QF	Quick Fittings
		NM	Male NPT
		NF	Fmale NPT
		PM	Male PT
		PF	Fmale PT
		GM	G螺纹外丝
		GF	G螺纹内丝

端口数量
1
2
3

Diagram A

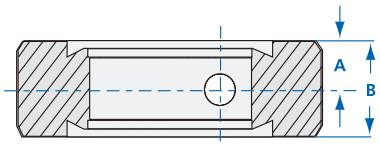

Dimensional Callout On Diagram A

Flange Size	Dimensions, mm	
	A	B
CF16	6.35	12.7
CF35	9.53	19.05
CF50	8.73	17.45

Diagram C

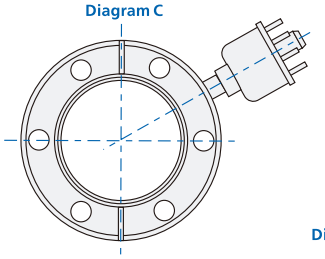

Diagram D

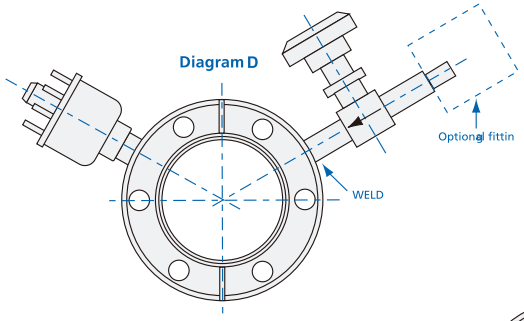

Diagram B

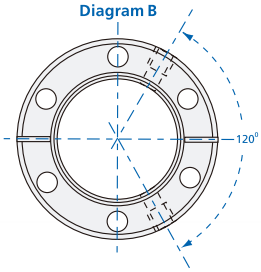

Diagram E

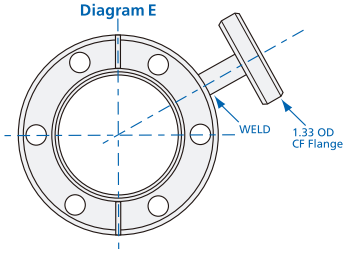





注：1、本页所有物料号默认为通孔法兰，若需求公制螺纹孔物料号后-MT；英制螺纹孔物料号后-IT

2、型号说明仅用于型号组成规则，有些组合实际并不存在。如有疑问请联系迈格诺科销售代表。

3、更多尺寸或非标定制需求请咨询迈格诺科销售代表。

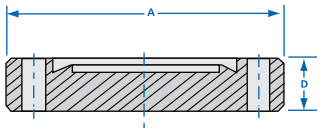

CF Blank Flange Fixed

Part Number	Flange Size	Dimensions, mm	
		A	D
66301-0133	CF16	34.00	7.00
※66301-0212	CF25	54.00	10.50
66301-0275	CF35	70.00	12.70
66301-0338	CF50	85.70	16.00
66301-0450	CF63	114.30	19.10
66301-0600	CF100	152.40	20.00
66301-0800	CF160	202.00	22.00
66301-1000	CF200	254.00	24.60

※注：因新老国标不同，CF25法兰有两种尺寸。本书所有涉及CF25法兰的物料号均默认为国标03版尺寸。
如需国标10版规格，请在物料号后加-01。例如10版CF25规格的固定盲板法兰，物料号表示为66301-0212-01.

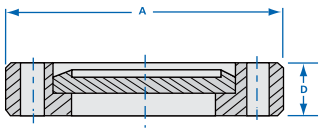

CF Blank Flange Rotatable

Part Number	Flange Size	Dimensions, mm	
		A	D
66302-0133	CF16	34.00	7.60
66302-0212	CF25	54.00	11.90
66302-0275	CF35	70.00	12.70
66302-0338	CF50	85.70	17.30
66302-0450	CF63	114.30	19.10
66302-0600	CF100	152.40	21.30
66302-0800	CF160	202.00	23.90
66302-1000	CF200	254.00	24.60

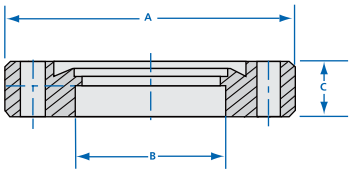

CF Boared Flange Fixed

Part Number	Flange Size	Dimensions, mm		
		A	B	C
66303-0133	CF16	34.00	19.41	7.30
66303-0212	CF25	54.00	25.65	10.50
66303-0275	CF35	70.00	38.35	13.00
66303-0338	CF50	85.70	51.05	16.00
66303-0450	CF63	114.30	63.70	17.50
66303-0600	CF100	152.40	101.80	20.00
66303-0800	CF160	202.00	153.10	22.00
66303-1000	CF200	254.00	203.70	24.60

注：固定焊接法兰可向下配合不同规格管道，如CF63法兰需配合焊接管为1.5寸时。
物料号则表示为66303-0450-0150.

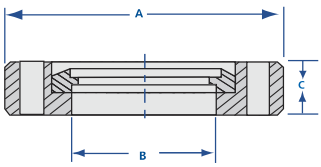

CF Bored Flange Rotatable

Part Number	Flange Size	Dimensions, mm		
		A	B	C
66305-0133	CF16	34.00	19.41	7.60
66305-0212	CF25	54.00	25.65	11.90
66305-0275	CF35	70.00	38.35	12.70
66305-0338	CF50	85.70	51.05	17.30
66305-0450	CF63	114.30	63.70	19.10
66305-0600	CF100	152.40	101.80	21.30
66305-0800	CF160	202.00	153.10	23.90
66305-1000	CF200	254.00	203.70	24.60

注：活套焊接法兰可向下配合不同规格管道，如CF63法兰需配合焊接管为1.5寸时。
物料号则表示为66305-0450-0150.

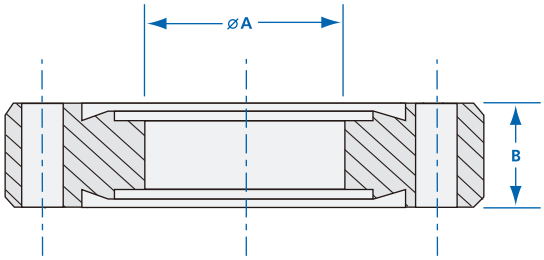

CF Double-Sided Flanges

Part Number	Flange Size	Dimensions, mm	
		A	B
66312-0133	CF 16	15.90	7.60
66312-0212	CF 25	25.70	11.90
66312-0275	CF 35	38.40	12.70
66312-0338	CF 50	51.10	16.00
66312-0450	CF 63	63.80	17.40
66312-0462	CF 80	76.50	19.10
66312-0600	CF 100	101.90	19.80
66312-0675	CF 130	127.30	21.30
66312-0800	CF 16	152.70	22.40
66312-1000	CF 200	203.50	24.60
66312-1325	CF 270	254.50	28.50





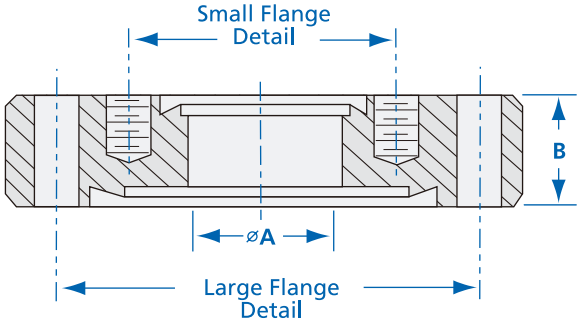

CF Zero Length Reducer Flanges

Part Number	Small FlangeJetail	Large FlangeDetail	Dimensions, mm	
			A	B
66313-212-133-075Z	CFI6	CF25	15.88	11.94
66313-275-133-075Z	CFI6	CF35	15.88	12.70
66313-275-212-100Z	CF25	CF35	25.40	12.70
66313-338-133-075Z	CFI6	CF50	15.88	17.45
66313-338-212-100Z	CF25	CF50	25.40	17.45
66313-338-275-150Z	CF35	CF50	38.10	1745
66313-450-133-075Z	CFI6	CF63	15.88	17.45
66313-450-212-100Z	CF25	CF63	25.40	17.45
66313-450-275-150Z	CF35	CF63	38.10	17.45
66313-450-338-200Z	CF50	CF63	50.80	1745
66313-462-133-075Z	CFI6	CF80	15.88	20.62
66313-462-212-100Z	CF25	CF80	25.40	20.62
66313-462-275-150Z	CF35	CF80	38.10	20.62
66313-462-338-200Z	CF50	CF80	50.80	20.62
66313-600-133-075Z	CFI6	CFI00	15.88	1984
66313-600-212-100Z	CF25	CFI00	25.40	19.84
66313-600-275-150Z	CF35	CFI00	38.10	19 84
66313-600-338-200Z	CF50	CFI00	50.80	19 84
66313-600-450-250Z	CF63	CFI00	63.50	19.84
66313-600-462-300Z	CF80	CFI00	76.20	19.84
66313-675-133-075Z	CFI6	CFI30	15.88	21.44
66313-675-212-100Z	CF25	CFI30	25.40	21.44
66313-675-275-150Z	CF35	CFI30	38.10	21.44
56313-675-338-200Z	CF50	CFI30	50.80	21.44
56313-675-450-250Z	CF63	CFI30	63.50	21.44
56313-675-162-300Z	CF80	CFI30	76.20	21.44
56313-675-600-400Z	CFI00	CFI30	101.60	21.44
56313-800-133-075Z	CFI6	CFI60	15.88	22.23
56313-800-212-100Z	CF25	CFI60	25.40	22.23
66313-800-275-150Z	CF35	CFI60	38.10	22.23
66313-800-338-200Z	CF50	CFI60	50.80	22.23
66313-800-450-250Z	CF63	CFI60	63.50	22.23
66313-800-462-300Z	CF80	CFI60	76.20	22.23
66313-800-600-400Z	CFI00	CFI60	101.60	22.23
66313-800-675-500Z	CFI30	CFI60	127.00	22.23
66313-1000-133-075Z	CFI6	CF200	15.88	24.59
66313-1000-212-100Z	CF25	CF200	25.40	24.59
66313-1000-275-150Z	CF35	CF200	38.10	24.59
66313-1000-338-200Z	CF50	CF200	50.80	24.59
66313-1000-450-250Z	CF63	CF200	63.50	24.59
66313-1000-462-300Z	CF80	CF200	76.20	24.59
66313-1000-600-400Z	CFI00	CF200	101.60	24.59
66313-1000-675-500Z	CFI30	CF200	127.00	24.59
66313-1000-800-600Z	CFI60	CF200	152.40	24.59
66313-1325-133-075Z	CFI6	CF270	15.88	28.58
66313-1325-212-100Z	CF25	CF270	25.40	28.58
66313-1325-275-150Z	CF35	CF270	38.10	28.58
66313-1325-338-200Z	CF50	CF270	50.80	28.58
66313-1325-450-250Z	CF63	CF270	63.50	28.58
66313-1325-462-300Z	CF80	CF270	76.20	28.58
66313-1325-600-400Z	CFI00	CF270	101.60	28 58
66313-1325-675-500Z	CFI30	CF270	127.00	28 58
66313-1325-800-600Z	CFI60	CF270	152.40	28.58
66313-1325-1000-800Z	CF200	CF270	203.20	28.58

Flange Detail Definitions, N=Nonrotatable,clearance bolt holes; NT=Nonrotatable,tapped bolt holes

CF 45° Radius Elbow with Tangents

Part Number	Flange Size	Dimensions, mm	
		A	B
66319-0133	CF 16	23.70	28.60
66319-0212	CF 25	35.58	38.10
66319-0275	CF 40	46.78	57.20
66319-0338	CF 50	65.22	76.20
66319-0450	CF 63	85.70	95.25
66319-0462	CF 80	100.70	114.30
66319-0600	CF 100	133.30	152.40

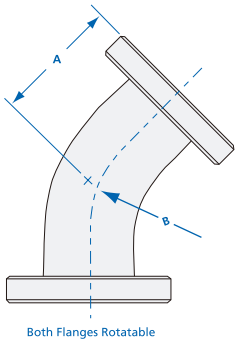

CF 90° Radius Elbow with Tangents

Part Number	Flange Size	Dimensions, mm		
		Tube OD	A	B
66320-0133	CF 16	19.05	38.10	28.60
66320-0212	CF 25	25.40	43.60	38.10
66320-0275	CF 35	38.10	63.70	57.15
66320-0338	CF 50	50.80	82.70	76.20
66320-0450	CF 63	63.5	104.65	95.25
66320-0462	CF 80	76.20	121.41	114.30
66320-0600	CF 100	101.60	163.58	152.40
66320-0800	CF 160	152.40	241.30	228.60
66320-1000	CF 200	203.20	317.50	304.80
66320-1325	CF 270	254.00	390.00	381.00

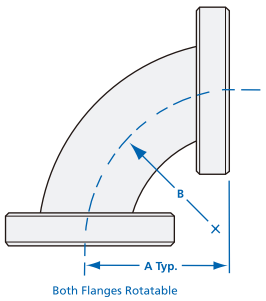

CF 90°Mitered Elbows

Part Number	Flange Size	Dimensions, mm	
		Tube OD	A
66321-0133	CF 16	19.05	38.10
66321-0212	CF 25	25.40	52.07
66321-0275	CF 35	38.10	62.48
66321-0338	CF 50	50.80	81.79
66321-0450	CF 63	63.50	85.85
66321-0450H	CF 63	63.50	104.65
66321-0462	CF 80	76.20	89.66
66321-0600	CF 100	101.60	109.73
66321-0600H	CF 100	101.60	134.87
66321-0675	CF 130	127.00	119.63
66321-0800	CF 160	152.40	139.70
66321-0800H	CF 160	152.40	166.62
66321-1000	CF 200	203.20	190.50
66321-1325	CF 270	254.00	254.00

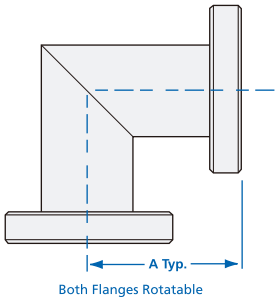

CF Equal Tee

Part Number	Flange Size	Dimensions, mm	
		Tube OD	A
66322-0133	CF 16	19.05	51.90
66322-0212	CF 25	25.40	53.00
66322-0275	CF 35	38.10	62.48
66322-0338	CF 50	50.80	82.70
66322-0450	CF 63	63.50	85.85
66322-0450H	CF 63	63.50	104.65
66322-0462	CF 80	76.20	89.66
66322-0600	CF 100	101.60	109.73
66322-0600H	CF 100	101.60	134.87
66322-0675	CF 130	127.00	119.63
66322-0800	CF 160	152.40	139.70
66322-0800H	CF 160	152.40	166.62
66322-1000	CF 200	203.20	190.50
66322-1325	CF 270	254.00	254.00

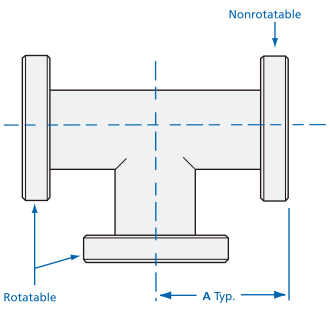

CF Reducer Tees

Part Number	Dimensions, mm					
	Flange 1 & 2		Flange 3		A	B
	Flange OD	Tube OD	Flange OD	Tube OD		
66323-02750133	CF 35	38.10	CF 16	19.05	62.48	39.32
66323-02750212	CF 35	38.10	CF 25	25.40	62.48	59.50
66323-03380133	CF 50	50.80	CF 16	19.05	82.70	45.70
66323-03380275	CF 50	50.80	CF 35	38.10	82.70	68.83
66323-04500275	CF 63	63.50	CF 35	38.10	85.85	75.18
66323-04500338	CF 63	63.50	CF 50	50.80	85.85	88.39
66323-04620338	CF 80	76.20	CF 50	50.80	89.66	94.74
66323-04620450	CF 80	76.20	CF 63	63.50	89.66	92.20
66323-06000275	CF 100	101.60	CF 35	38.10	109.73	94.23
66323-06000338	CF 100	101.60	CF 50	50.80	109.73	108.10
66323-06000450	CF 100	101.60	CF 63	63.50	109.73	104.90
66323-06000462	CF 100	101.60	CF 80	76.20	109.73	102.36
66323-06750600	CF 130	127.00	CF 100	101.60	115.15	118.45
66323-08000275	CF 160	152.40	CF 35	38.10	139.70	119.63
66323-08000338	CF 160	152.40	CF 50	50.80	139.70	133.50
66323-08000450	CF 160	152.40	CF 63	63.50	139.70	130.30
66323-08000600	CF 160	152.40	CF 100	101.60	139.70	135.13
66323-10000800	CF 200	203.20	CF 160	152.40	190.50	165.10

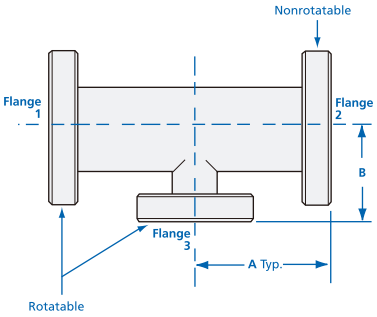

CF Reducer Crosses

Part Number	Dimensions, mm					
	Flange 1 & 2		Flange 3 & 4		A	B
	Flange OD	Tube OD	Flange OD	Tube OD		
66324-02750133	CF 35	38.10	CF 16	19.05	62.48	39.32
66324-02750212	CF 35	38.10	CF 25	25.40	62.48	59.50
66324-03380133	CF 50	50.80	CF 16	19.05	82.70	45.70
66324-03380275	CF 50	50.80	CF 35	38.10	82.70	58.83
66324-04500275	CF 63	63.50	CF 35	38.10	85.85	75.18
66324-04500338	CF 63	63.50	CF 50	50.80	85.85	89.05
66324-04620338	CF 80	76.20	CF 50	50.80	89.66	94.74
66324-04620450	CF 80	76.20	CF 63	63.50	89.66	92.20
66324-06000275	CF 100	101.60	CF 35	38.10	109.73	94.23
66324-06000338	CF 100	101.60	CF 50	50.80	109.73	108.10
66324-06000450	CF 100	101.60	CF 63	63.50	109.73	104.90
66324-06000462	CF 100	101.60	CF 80	76.20	109.73	102.36
66324-06750600	CF 130	127.00	CF 100	101.60	115.15	118.45
66324-08000275	CF 160	152.40	CF 35	38.10	139.70	119.63
66324-08000338	CF 160	152.40	CF 50	50.80	139.70	133.50
66324-08000450	CF 160	152.40	CF 63	63.50	139.70	130.30
66324-08000600	CF 160	152.40	CF 100	101.60	139.70	135.13
66324-10000800	CF 200	203.20	CF 160	152.40	190.50	165.10

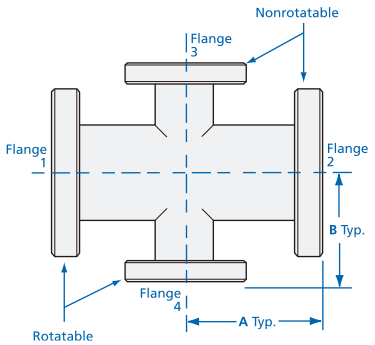

Note: Other reducer combinations can be supplied upon request.

CF 6-Way Cube Crosses

Part Number	Flange Size	Dimensions, mm
		A
66235-0133	CF 16	17.02
66235-0275	CF 40	34.80
66235-0450	CF 60	56.90
66235-0600	CF 100	75.69
66235-0800	CF 160	101.09

Note: Cube crosses are available in other sizes upon request

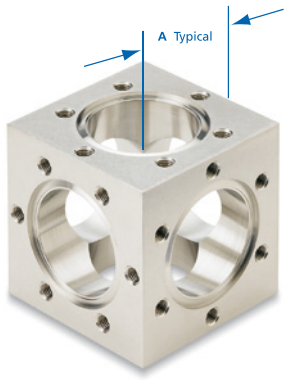

CF OFHC-Copper

Part Number	Flange Size	Dimensions, mm	
		A	B
66306-0133	CF16	16.30	21.30
※66306-0212	CF25	25.60	33/55
66306-0275	CF35	39.00	48.20
66306-0338	CF50	52.00	61.60
66306-0450	CF63	63.80	82.40
66306-0600	CF100	102.00	120.50
66306-0800	CF160	152.80	171.30
66306-1000	CF200	203.60	222.10

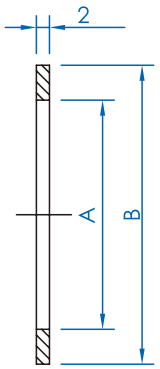

※注：因新老国标不同，CF25垫片有两种外径尺寸。本书物料号默认为外径33尺寸。
如需外径35尺寸，物料号表示为66306-0212-35

Hex Head Bolts-metric Thread

Part Number	Flange Size	Flange Bolt Holes
66307-0133	CF16	6
66307-0212	CF25	6
66307-0275	CF35	6
66307-0338	CF50	8
66307-0450	CF63	8
66307-0600	CF100	10
66307-0800	CF160	16
66307-1000	CF200	20

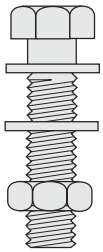

Vacuum Through-hole bolt

Part Number	Size	Length
66330-003010	M3	10
66330-004015	M4	15
66330-005020	M5	20
66330-006025	M6	25
66330-008030	M8	30
66330-010050	M10	50



注:长度可按需求定制生产，可提供镀银表面，代码SP;
如需要M3长度为20mm,表面镀银;物料号为66330-003020-SP

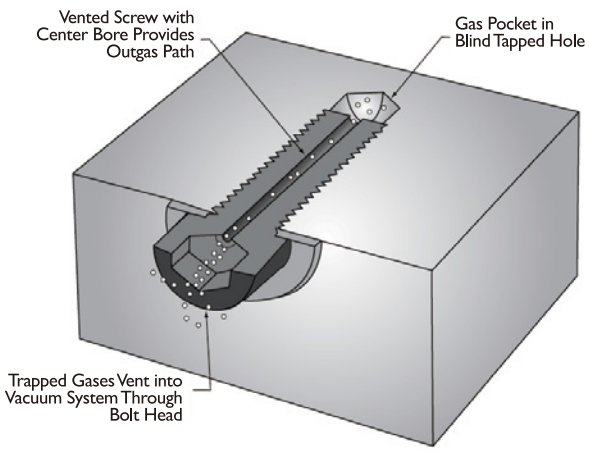

Gasket Clip

Part Number	Dimensions, mm		
	A	B	C
66308	6.00	19.50	51.00

All Gasket Clip-10 per package

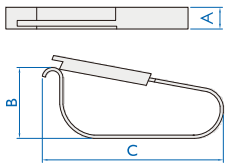



Plate Nut for 1 1/3 (33.78) and 2 3/4 (69.85) Flanges

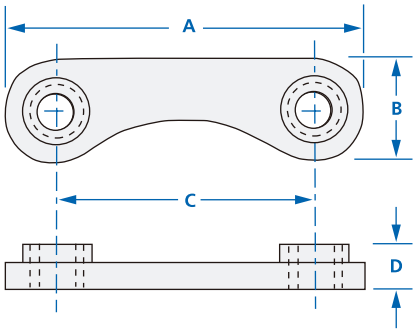

Plate Nut for Flanges larger than 2 3/4 (69.85)

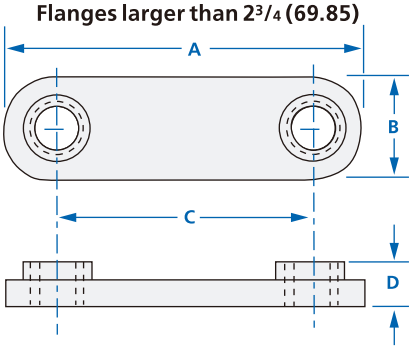

Plate Nuts

Part Number	Nominal Flange Size	Thread Size	Dimensions, mm			
			A	B	C	D
66314-0133	CF 16	8-32	20.32	7.62	13.46	3.81
66314-0275	CF 35	1/4-28	40.39	12.70	29.21	4.57
66314-0338	CF 50	5/16-24	44.45	12.70	27.69	5.59
66314-0450	CF 63	5/16-24	51.56	12.70	35.31	5.59
66314-0462	CF 80	5/16-24	44.45	12.70	31.75	5.59
66314-0600	CF 100	1/4-24	44.45	12.70	28.45	5.59
66314-1000	CF 200	5/16-24	44.45	12.70	30.23	5.59
66314-0133M	CF 16	M4xP0.7	20.32	7.62	13.5	3.2
66314-0275M	CF 35	M6xP1.0	42.2	12.70	29.5	4.7
66314-0338M	CF 50	M8xP1.25	44.5	12.70	27.7	5.3
66314-0450M	CF 63	M8xP1.25	51.6	12.70	35.3	5.3
66314-0462M	CF 80	M8xP1.25	45.8	12.70	31.6	5.3
66314-0600M	CF 100	M8xP1.25	41.7	12.70	25.4	5.3
66314-0800M	CF 160	M8xP1.25	44.45	12.70	28.5	5.3
66314-1000M	CF 200	M8xP1.25	44.45	12.70	30.2	5.3

All plate nuts - 24 per package

CF Half Nipples

Part Number	Flange Size	Dimensions, mm	
		Tube OD	A
66315-0133	CF 16	19.05	100/OPTION
66315-0212	CF 25	25.40	100/OPTION
66315-0275	CF 35	38.10	100/OPTION
66315-0338	CF 50	50.80	100/OPTION
66315-0450	CF 63	63.50	100/OPTION
66315-0462	CF 80	76.20	100/OPTION
66315-0600	CF 100	101.60	100/OPTION
66315-0800	CF 130	152.40	100/OPTION
66315-1000	CF 200	203.20	100/OPTION
66315-1325	CF 270	254.00	100/OPTION

注:可按照需求定制任意长度。例如，需定制CF35 L=750MM,订购号为66315-0275-0750

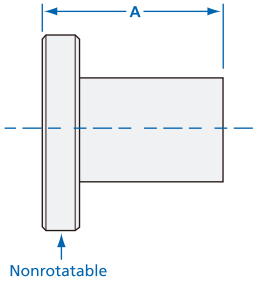

CF Full Nipples

Part Number	Flange Size	Dimensions, mm	
		Tube OD	A
66316-0133	CF 16	19.05	100/OPTION
66316-0212	CF 25	25.40	100/OPTION
66316-0275	CF 35	38.10	100/OPTION
66316-0338	CF 50	50.80	100/OPTION
66316-0450	CF 63	63.50	100/OPTION
66316-0462	CF 80	76.20	100/OPTION
66316-0600	CF 100	101.60	100/OPTION
66316-0800	CF 130	152.40	100/OPTION
66316-1000	CF 200	203.20	100/OPTION
66316-1325	CF 270	254.00	100/OPTION

注:可按照需求定制任意长度。例如，需定制CF35 L=750MM,订购号为66316-0275-0750

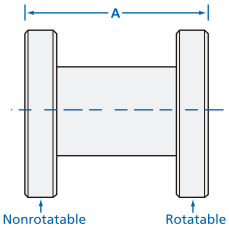

CF Reducer Nipples

Part Number	Flange Size		Dimensions, mm	
	Flange1	Flange 2	Tube OD	A
66317-02750133	CF 35	CF 16	19.05	100/OPTION
66317-04500133	CF 63	CF 16	19.05	100/OPTION
66317-04500275	CF 63	CF 35	38.10	100/OPTION
66317-04500338	CF 63	CF 50	50.80	100/OPTION
66317-06000275	CF 100	CF 35	38.10	100/OPTION
66317-08000275	CF 160	CF 35	38.10	100/OPTION
66317-08000450	CF 160	CF 63	63.50	100/OPTION
66317-08000600	CF 160	CF 100	101.40	100/OPTION
66317-10000275	CF 200	CF 35	38.10	100/OPTION
66317-10000450	CF 200	CF 63	63.50	100/OPTION
66317-10000600	CF 200	CF 100	101.40	100/OPTION
66317-10000800	CF 200	CF 160	152.40	100/OPTION
66317-13251000	CF 270	CF 200	203.20	100/OPTION

可按照需求定制任意长度。例如，需定制CF35*CF16=750MM,订购号为66317-02750133-0750

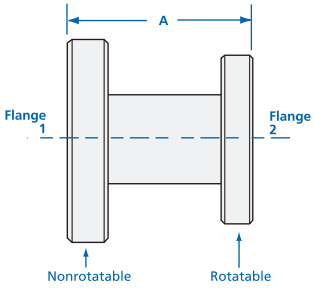

CF Conical Reducer Nipples

Part Number	Flange Size		Dimensions, mm
	Flange1 OD	Flange 2 Tube OD	A
66318-02120133	CF 25	CF 16	44.20
66318-02750133	CF 35	CF 16	71.10
66318-02750212	CF 35	CF 25	70.80
66318-03380212	CF 50	CF 22	73.30
66318-03380275	CF 50	CF 35	73.80
66318-04500275	CF 50	CF 35	75.69
66318-04500338	CF 50	CF 50	77.80
66318-04620275	CF 80	CF 35	104.65
66318-04620338	CF 80	CF 50	105.10
66318-04620450	CF 80	CF 63	108.10
66318-06000338	CF 100	CF 50	109.60
66318-06000450	CF 100	CF 63	112.60

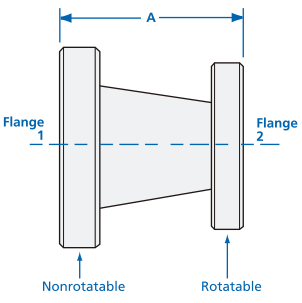

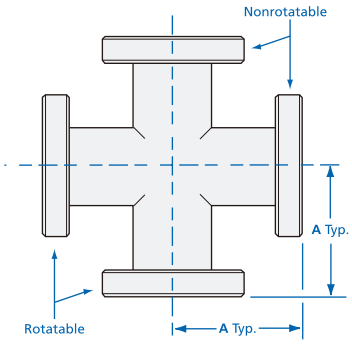

CF 4-Way Crosses

Part Number	Flange Size	Dimensions, mm	
		Tube OD	A
66326-0133	CF 16	19.05	51.90
66326-0212	CF 25	25.40	53.00
66326-0275	CF 35	38.10	62.48
66326-0338	CF 50	50.80	82.70
66326-0450	CF 63	63.50	85.85
66326-0450H	CF 63	63.50	104.65
66326-0462	CF 80	76.20	89.66
66326-0600	CF 100	101.60	109.73
66326-0600H	CF 100	101.60	134.87
66326-0675	CF 130	127.00	119.63
66326-0800	CF 160	152.40	139.70
66326-0800H	CF 160	152.40	166.62
66326-1000	CF 200	203.20	190.50
66326-1325	CF 270	254.00	254.00

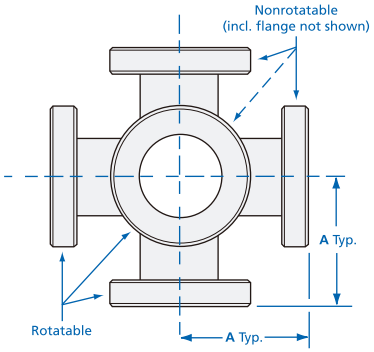

CF 6-Way Crosses

Part Number	Flange Size	Dimensions, mm	
		Tube OD	A
66327-0133	CF 16	19.05	51.90
66327-0212	CF 25	25.40	53.00
66327-0275	CF 35	38.10	62.48
66327-0338	CF 50	50.80	82.70
66327-0450	CF 63	63.50	85.85
66327-0450H	CF 63	63.50	104.65
66327-0462	CF 80	76.20	89.66
66327-0600	CF 100	101.60	109.73
66327-0600H	CF 100	101.60	134.87
66327-0675	CF 130	127.00	119.63
66327-0800	CF 160	152.40	139.70
66327-0800H	CF 160	152.40	166.62
66327-1000	CF 200	203.20	190.50
66327-1325	CF 270	254.00	254.00

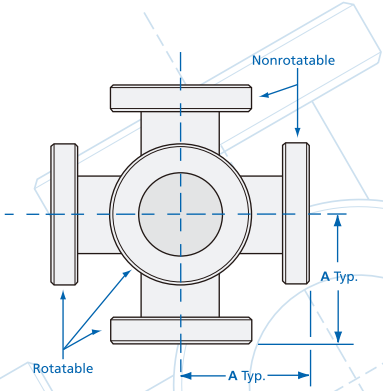

CF 5-Way Crosses

Part Number	Flange Size	Dimensions, mm	
		Tube OD	A
66328-0133	CF 16	19.05	51.90
66328-0212	CF 25	25.40	53.00
66328-0275	CF 35	138.10	62.48
66328-0338	CF 50	50.80	82.70
66328-0450	CF 63	63.50	85.85
66328-0450H	CF 63	63.50	104.65
66328-0462	CF 80	76.20	89.66
66328-0600	CF 100	101.60	109.73
66328-0600H	CF 100	101.60	134.87
66328-0675	CF 130	127.00	119.63
66328-0800	CF 160	152.40	139.70
66328-0800H	CF 160	152.40	166.62
66328-1000	CF 200	203.20	190.50
66328-1325	CF 270	254.00	254.00



Adapter Fittings

MAGNOX

NW to CF Conical Adapter Nipples

Part Number	Flange Size		Dimensions .mm
	Flange 1	Flange 2	A
66501-16212	KF-16	CF 25	43.70
66501-16275	KF-16	CF 35	69.34
66501-25133	KF-25	CF 16	43.00
66501-25275	KF-25	CF 35	69.34
66501-25338	KF-25	CF 50	72.10
66501-40133	KF-40	CF 16	68.40
66501-40212	KF-40	CF 25	69.10
66501-40338	KF-40	CF 50	72.10
66501-40450	KF-40	CF 63	73.66
66501-40462	KF-40	CF 80	102.40
66501-50212	KF-50	CF 25	69.10
66501-50275	KF-50	CF 35	69.60
66501-50450	KF-50	CF 63	73.66
66501-50462	KF-50	CF 80	102.40
66501-50600	KF-50	CF 100	106.93

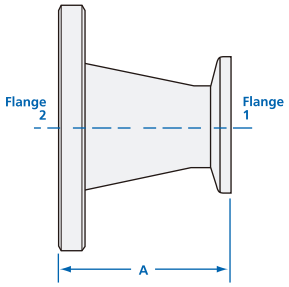

NW to CF Adapter Nipples

Part Number	Flange Size		Dimensions, mm	
	Flange 1	Flange 2	Tube OD	A
66502-10133	KF-10	CF 16	12.70	44.30
66502-16133	KF-16	CF 16	19.05	44.30
66502-25212	KF-25	CF 25	25.40	44.50
66502-40275	KF-40	CF 35	38.10	45.50
66502-50133	KF-50	CF 16	19.05	48.00
66502-50338	KF-50	CF 50	50.80	48.00

可按照需求定制任意长度。例如，需定制KF40*CF35L=750mm,订购号为66502-40275-0750

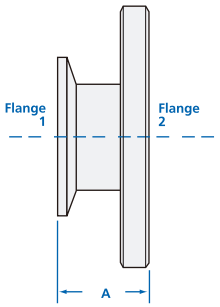

NW to ASA Conical Adapter Nipples

Part Number	Flange Size		Dimensions .mm
	Flange 1	Flange 2	A
66503-25050	KF-25	ASA-5	70.61
66503-40050	KF-40	ASA-5	70.61
66503-40060	KF-40	ASA-6	102.36
66503-50050	KF-50	ASA-5	70.61
66503-50060	KF-50	ASA-6	102.36
66503-50075	KF-50	ASA75	102.36

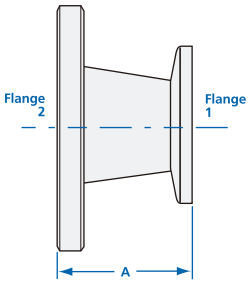

NW to ASA Adapter Nipples

Part Number	Flange Size		Dimensions, mm
	Flange 1	Flange 2	Tube OD
66504-16050	KF-16	ASA-5	19.05
66504-16060	KF-16	ASA-6	19.05
66504-16075	KF-16	ASA-7.5	19.05
66504-16090	KF-16	ASA-9	19.05
66504-16110	KF-16	ASA-11	19.05
66504-25060	KF-25	ASA-6	25.40
66504-25075	KF-25	ASA-7.5	25.40
66504-25090	KF-25	ASA-9	25.40
66504-25110	KF-25	ASA-11	25.40
66504-40075	KF-40	ASA-7.5	38.10
66504-40090	KF-40	ASA-9	38.10
66504-40110	KF-40	ASA-11	38.10
66504-50090	KF-50	ASA-9	50.80
66504-50110	KF-50	ASA-11	50.80

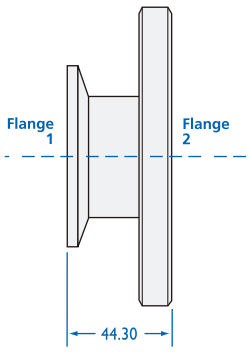

可按照需求定制任意长度。例如，需定制KF16*ASA5" L=750MM,订购号为66504-16050-0750

Note:Add suffix "-G" to model number if O-Ring Groove is required on ASA flange.
Call for ASA groove prices.

Adapter Fittings

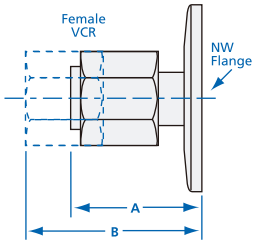

NW Female VCR Adapters

Part Number	Flange Size	VCR Size	Dimensions, mm	
			A	B
66519-1004	KF-10	1/4"	37.08	30.50
66519-1604	KF-16	1/4"	37.08	30.50
66519-2504	KF-25	1/4"	37.08	30.50
66519-4004	KF-40	1/4"	37.08	30.50
66519-5004	KF-50	1/4"	37.08	30.50
66519-1606	KF-16	3/8"	41.91	30.95
66519-2506	KF-25	3/8"	41.91	30.95
66519-4006	KF-40	3/8"	41.91	30.95
66519-5006	KF-50	3/8"	41.91	30.95
66519-1608	KF-16	1/2"	41.91	32.30
66519-2508	KF-25	1/2"	41.91	32.30
66519-4008	KF-40	1/2"	41.91	30.95
66519-5008	KF-50	1/2"	41.91	30.95

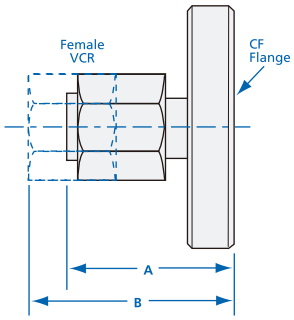

CF Female VCR Adapters

Part Number	Flange Size	VCR Size	Dimensions .mm	
			A	B
66520-133004	CF 16	1/4"	34.54	32.30
66520-133006	CF 16	3/8"	39.37	32.80
66520-275004	CF 35	1/4"	34.54	33.50
66520-275006	CF 40	3/8"	39.37	34.00

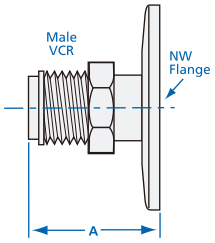

NW Male VCR Adapters

Part Number	Flange Size	Tube OD	Dimensions, mm
			A
66521-1004	KF-10	1/4"	33.00
66521-1604	KF-16	1/4"	33.00
66521-2504	KF-25	1/4"	33..00
66521-4004	KF-40	1/4"	33.00
66521-5004	KF-50	1/4"	33.00
66521-1606	KF-16	3/8"	35.30
66521-2506	KF-25	3/8"	35.30
66521-4006	KF-40	3/8"	35.30
66521-5006	KF-50	3/8"	35.30
66521-1608	KF-16	1/2"	35.60
66521-2508	KF-25	1/2"	35.30
66521-4008	KF-40	1/2"	35.30
66521-5008	KF-50	1/2"	35.30

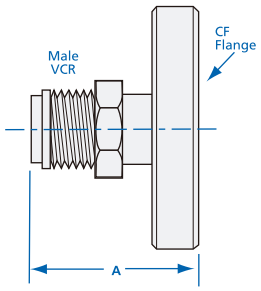

CF Male VCR Adapters

Part Number	Flange Size	VCR Size	Dimensions .mm
			A
66522-133004	CF 16	1/4"	33.50
66522-133006	CF 16	3/8"	49.80
66522-275004	CF 35	1/4"	48.70
66522-275006	CF 35	3/8"	51.00

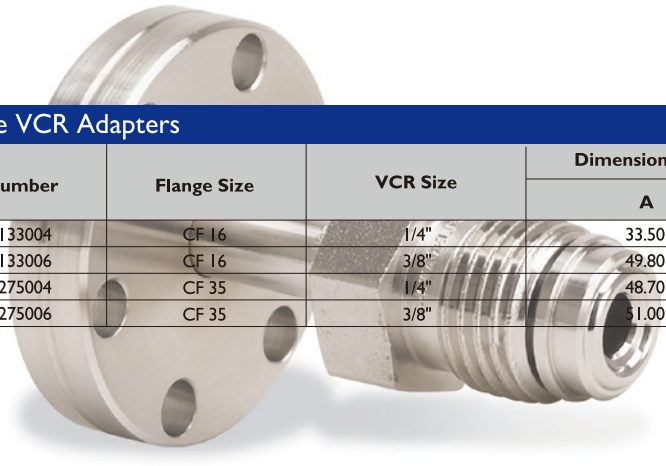

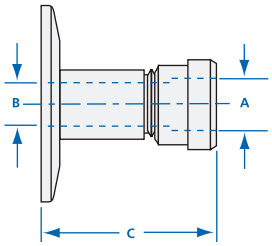

NW Quick Disconnect Adapters

Part Number	Flange Size	Dimensions, mm		
		A	B	C
66523-1004	KF-10	6.35	4.75	37.59
66523-1604	KF-16	6.35	4.75	37.59
66523-2504	KF-25	6.35	4.75	37.59
66523-4004	KF-40	6.35	4.75	37.59
66523-1006	KF-10	9.53	7.14	41.15
66523-1606	KF-16	9.53	7.14	41.15
66523-2506	KF-25	9.53	7.14	41.15
66523-4006	KF-40	9.53	7.14	41.15
66523-1608	KF-16	12.70	10.31	45.47
66523-2508	KF-25	12.70	10.31	45.47
66523-4008	KF-40	12.70	10.31	45.47
66523-5008	KF-50	12.70	10.31	45.47
66523-2512	KF-25	19.05	15.88	49.02
66523-4012	KF-40	19.05	15.88	49.02
66523-5012	KF-50	19.05	15.88	49.02
66523-4016	KF-40	25.40	22.23	49.02
66523-5016	KF-50	25.40	22.23	49.02

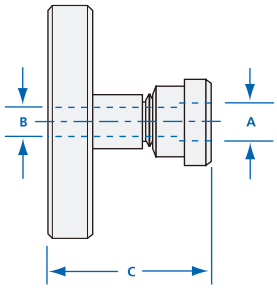

CF Quick Disconnect Adapters

Part Number	Flange Size	Dimensions, mm		
		A	B	C
66524-13304	CF 16	6.35	4.76	35.31
66524-13306	CF 16	9.53	7.14	38.86
66524-13308	CF 16	12.70	10.32	43.18
66524-27504	CF 35	6.35	4.76	35.31
66524-27506	CF 35	9.53	7.14	38.86
66524-27508	CF 35	12.70	10.32	43.18
66524-27512	CF 35	19.05	15.88	50.55
66524-27516	CF 35	25.40	22.23	51.05

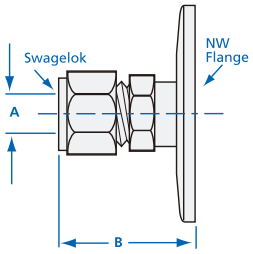

NW Swagelok Adapters

Part Number	Flange Size	Dimensions, mm	
		A	B
66525-1004	KF-10	6.35	45.00
66525-1604	KF-16	6.35	45.00
66525-2504	KF-25	6.35	45.00
66525-4004	KF-40	6.35	45.00
66525-5004	KF-50	6.35	45.00
66525-1006	KF-10	9.53	48.70
66525-1606	KF-16	9.53	47.40
66525-2506	KF-25	9.53	47.40
66525-4006	KF-40	9.53	47.40
66525-5006	KF-50	9.53	47.40

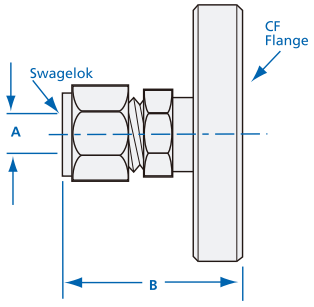

CF Swagelok Adapters

Part Number	Flange Size	Dimensions .mm	
		A	B
66526-13304	CF 16	6.35	46.80
66526-13306	CF 16	9.53	49.20
66526-27504	CF 35	6.35	48.00
66526-27506	CF 35	9.53	50.40

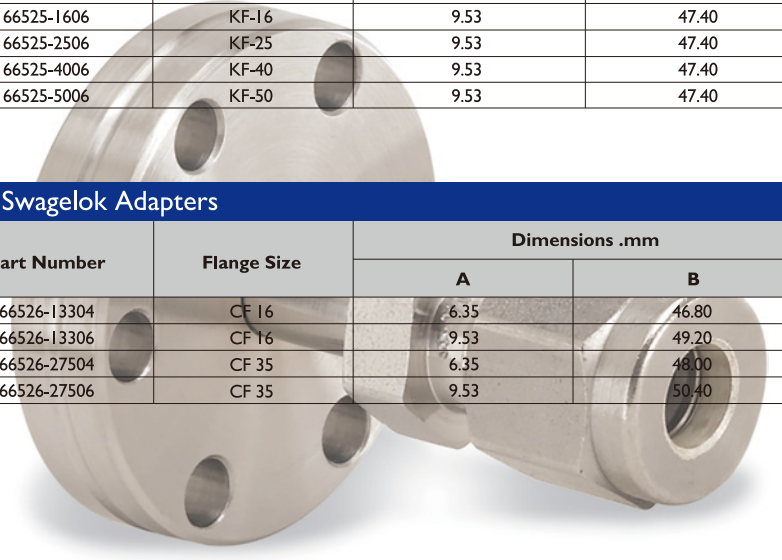

Adapter Fittings

NW to ISO Conical Adapter Nipples

Part Number	Flange Size		Dimensions, mm
	Flange 1	Flange 2	A
66505-40063	NW-40	ISO-63	70.61
66505-40080	NW-40	ISO-80	102.36
66505-50063	NW-50	ISO-63	70.61
66505-50080	NW-50	ISO-80	102.36
66505-50100	NW-50	ISO-100	102.36

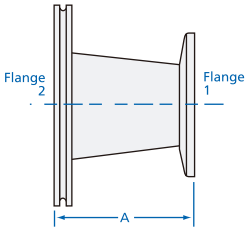

NW to ISO Adapter Nipples

Part Number	Flange Size		Dimensions, mm
	Flange 1	Flange 2	Tube OD
66514-16063	NW-16	ISO-63	19.05
66514-25063	NW-25	ISO-63	25.40
66514-25080	NW-25	ISO-80	25.40
66514-25100	NW-25	ISO-100	25.40
66514-40100	NW-40	ISO-100	38.10
66514-50160	NW-50	ISO-160	50.80

可按照需求定制任意长度。例如，需定制KF16*ISO63 L=750MM,订购号为66514-16063-0750

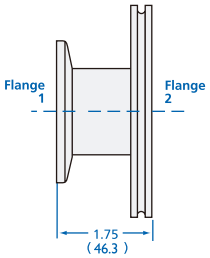

NW to ISO Adapter Tees

Part Number	Flange Size		Dimensions, mm	
	Flange 1&2	Flange 3	A	B
66506-40063	ISO-63	NW-40	82.55	73.66
66506-40080	ISO-80	NW-40	88.90	80.01
66506-40100	ISO-100	NW-40	104.90	92.71
66506-40160	ISO-160	NW-40	136.65	118.11
66506-50063	ISO-63	NW-50	82.55	86.36
66506-50080	ISO-80	NW-50	88.90	92.71
66506-50100	ISO-100	NW-50	104.90	105.41
66506-50160	ISO-160	NW-50	136.65	130.81

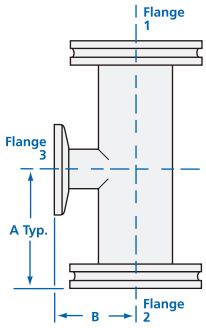

NW to ISO Adapter Crosses

Part Number	Flange Size		Dimensions, mm	
	Flange 1&2	Flange 3&4	A	B
66507-40063	ISO-63	NW-40	82.55	73.66
66507-40080	ISO-80	NW-40	88.90	80.01
66507-40100	ISO-100	NW-40	104.90	92.71
66507-40160	ISO-160	NW-40	136.65	118.11
66507-50063	ISO-63	NW-50	82.55	86.36
66507-50080	ISO-80	NW-50	88.90	92.71
66507-50100	ISO-100	NW-50	104.90	105.41
66507-50160	ISO-160	NW-50	136.65	130.81

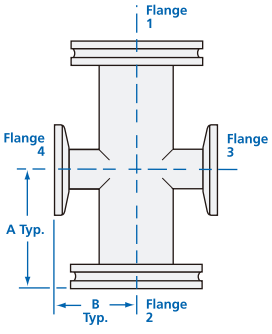

CF to ISO Conical Adapter Nipples

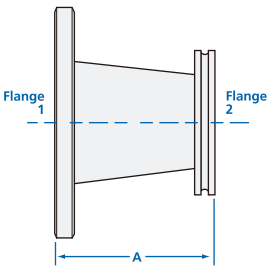

Part Number	Flange Size		Dimensions, mm
	Flange 1	Flange 2	A
66508-275063	CF 35	ISO-63	71.88
66508-275080	CF 35	ISO-80	103.63
66508-338063	CF 50	ISO-63	74.60
66508-338080	CF 50	ISO-80	106.40
66508-338100	CF 50	ISO-100	106.40
66508-450080	CF 63	ISO-80	107.95
66508-450100	CF 63	ISO-100	107.95
66508-462063	CF 80	ISO-63	104.90
66508-462100	CF 80	ISO-100	104.90
66508-600063	CF 100	ISO-63	109.47
66508-600080	CF 100	ISO-80	109.47

CF to ISO Adapter Nipples

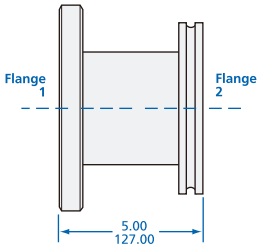

Part Number	Flange Size		Dimensions, mm
	Flange 1	Flange 2	A
66509-0450063	CF 63	ISO-63	63.50
66509-0462080	CF 80	ISO-80	76.20
66509-0600100	CF 100	ISO-100	101.60
66509-0800160	CF 160	ISO-160	152.40
66509-1000200	CF 200	ISO-200	203.20

注：可按照需求定制任意长度。例如，需定制CF4.5*IS063 L=750mm，订购号为66509-0450063-0750

ISO to ASA Conical Adapter Nipples

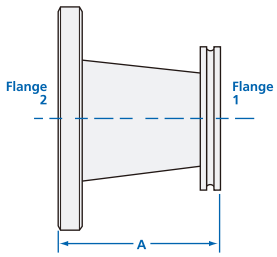

Part Number	Flange Size		Dimensions, mm
	Flange 1	Flange 2	Tube OD
66510-063050	ISO-63	ASA-5	73.15
66510-063060	ISO-63	ASA-6	104.90
66510-063075	ISO-63	ASA-7.5	104.90
66510-080050	ISO-80	ASA-5	104.90
66510-100075	ISO-100	ASA-7.5	104.90
66510-100050	ISO-100	ASA-5	104.90

ISO to ASA Adapter Nipples

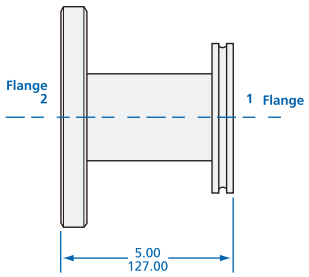

Part Number	Flange Size		Dimensions, mm
	Flange 1	Flange 2	Tube OD
66511-063110	ISO-63	ASA-11	63.50
66511-080060	ISO-80	ASA-6	76.20
66511-080110	ISO-80	ASA-11	76.20
66511-100075	ISO-100	ASA-7.5	101.60
66511-100090	ISO-100	ASA-9	101.60
66511-100110	ISO-100	ASA-11	101.60
66511-160090	ISO-160	ASA-9	152.40
66511-160110	ISO-160	ASA-11	152.40
66511-200110	ISO-200	ASA-11	203.20
66511-200135	ISO-200	ASA-13.5	203.20

注：可按照需求定制任意长度。例如，需定制IS063*ASA-11 L=750mm，订购号为66511-063110-0750

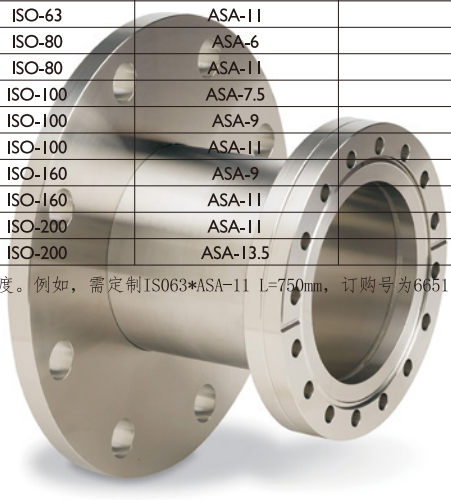

Adapter Fittings

CF to ASA Conical Adapter Nipples

Part Number	Flange Size		Dimensions, mm
	Flange 1	Flange 2	A
66512-21250	CF 25	ASA-5	70.87
66512-27550	CF 35	ASA-5	71.88
66512-27560	CF 35	ASA-6	103.63
66512-33850	CF 50	ASA-5	72.38
66512-33860	CF 50	ASA-6	104.14
66512-33875	CF 50	ASA-7.5	104.14
66512-45050	CF 63	ASA-5	76.20
66512-45060	CF 63	ASA-6	107.95
66512-45075	CF 63	ASA-7.5	107.95
66512-46250	CF 80	ASA-5	105.66
66512-46275	CF 80	ASA-7.5	105.66
66512-60050	CF 100	ASA-5	109.47
66512-60060	CF 100	ASA-6	109.47

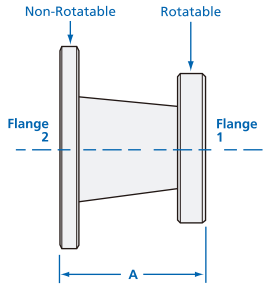

CF to ASA Adapter Nipples

Part Number	Flange Size		Dimensions, mm
	Flange 1	Flange 2	Tube OD
66513-0133050	CF 16	ASA-5	19.05
66513-0133060	CF 16	ASA-6	19.05
66513-0212060	CF 25	ASA-6	25.40
66513-0462060	CF 80	ASA-6	76.20
66513-0133075	CF 16	ASA-75	19.05
66513-0212075	CF 25	ASA-7.5	25.40
66513-0275075	CF 35	ASA-7.5	38.10
66513-0133090	CF 16	ASA-9	19.05
66513-0212090	CF 25	ASA-9	25.40
66513-0275090	CF 35	ASA-9	38.10
66513-0338090	CF 50	ASA-9	50.80
66513-0450090	CF 63	ASA-9	63.50
66513-0462090	CF 80	ASA-9	76.20
66513-0600090	CF 100	ASA-9	101.60
66513-0133110	CF 16	ASA-11	19.05
66513-0212110	CF 25	ASA-11	25.40
66513-0275110	CF 35	ASA-11	38.10
66513-0338110	CF 50	ASA-11	50.80
66513-0450110	CF 63	ASA-11	63.50
66513-0462110	CF 80	ASA-11	76.20
66513-0600110	CF 100	ASA-11	101.60
66513-0800110	CF 160	ASA-11	152.40
66513-0133135	CF 16	ASA-13.5	19.05
66513-0212135	CF 25	ASA-13.5	25.40
66513-0275135	CF 35	ASA-13.5	38.10
66513-0338135	CF 50	ASA-13.5	50.80
66513-0450135	CF 63	ASA-13.5	63.50
66513-0462135	CF 80	ASA-13.5	76.20
66513-0600135	CF 100	ASA-13.5	101.60
66513-0800135	CF 160	ASA-13.5	152.40
66513-1000135	CF 200	ASA-13.5	203.20

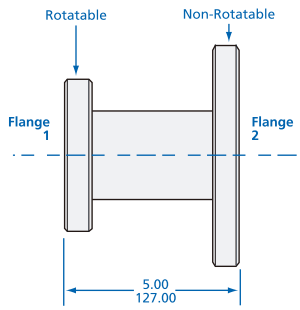

NW Welch Pump Adapters

Part Number	Flange Size	Dimensions, mm	
		Thread	A
66515-1603813	KF16	¾-18 NPSM x1.00	11.43
66515-1603420	KF16	¾-20 NPSM x1.00	14.28
66515-2503420	KF25	¾-20 NPSM x1.00	14.28
66515-2510020	KF25	1-20 NPSM x1.00	19.05
66515-4010020	KF40	1-20 NPSMx 1.00	19.05
66515-4011212	KF40	1½-12 NPSM x 1.00	28.58
66515-4013420	KF40	1¾-20 NPSMx1.00	34.93
66515-5013420	KF50	1¾-20 NPSM x1.00	34.93

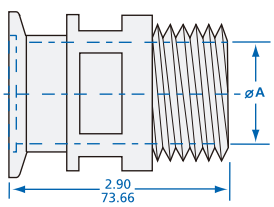

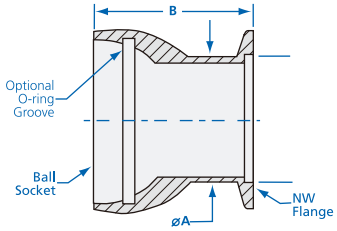

NW Ball Socket Adapters

Part Number	Dimensions, mm				
	Ball Socket	Flange I Type	Tube OD A	A	B
66516-405030	50/30	NW-40	38.10	48.26	-
66516-405030G	50/30	NW-40	38.10	48.26	2-224
66516-507550	75/50	NW-50	50.80	67.31	-
66516-507550G	75/50	NW-50	50.80	67.31	2-232

Note:"G" in model number indicates O-ring and O-ring groove.

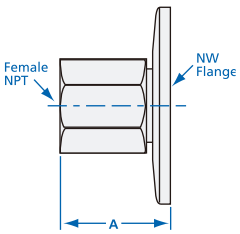

NW Female Pipe Adapters

Part Number	Flange Size	Thread Szie	Dimensions, mm
			A
66517-1002	KF10	1/8"	23.37
66517-1602	KF16	1/8"	23.37
66517-2502	KF25	1/8"	23.37
66517-4002	KF40	1/8"	23.37
66517-5002	KF50	1/8"	23.37
66517-1004	KF10	1/4"	27.18
66517-1604	KF16	1/4"	27.18
66517-2504	KF25	1/4"	27.18
66517-4004	KF40	1/4"	27.18
66517-5004	KF50	1/4"	27.18
66517-1608	KF16	1/2"	36.58
66517-2508	KF25	1/2"	35.31
66517-4008	KF40	1/2"	35.31
66517-5008	KF50	1/2"	35.31
66517-2512	KF25	3/4"	36.83
66517-4012	KF40	3/4"	36.83
66517-5012	KF50	3/4"	36.83
66517-2516	KF25	1"	39.88
66517-4016	KF40	1"	39.88
66517-5016	KF50	1"	39.88

注:此产品示意图仅供参考,具体工艺及尺寸请咨询销售。
需求的煤纹规格不同在订购号最后一位加对应的螺纹首字母,如要KF25"1/4"NPT内螺纹,订购号为66517-2504-N。

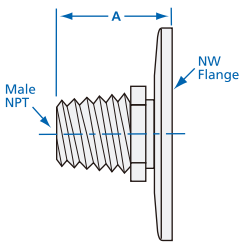

NW Male Pipe Adapters

Part Number	Flange Size	Thread Szie	Dimensions, mm
			A
66518-1002	KF10	1/8"	35.00
66518-1602	KF16	1/8"	35.00
66518-2502	KF25	1/8"	35.00
66518-4002	KF40	1/8"	35.00
66518-5002	KF50	1/8"	35.00
66518-1004	KF10	1/4"	35.00
66518-1604	KF16	1/4"	35.00
66518-2504	KF25	1/4"	35.00
66518-4004	KF40	1/4"	35.00
66518-5004	KF50	1/4"	35.00
66518-1608	KF16	1/2"	40.00
66518-2508	KF25	1/2"	40.00
66518-4008	KF40	1/2"	40.00
66518-5008	KF50	1/2"	40.00
66518-2512	KF25	3/4"	40.00
66518-4012	KF40	3/4"	40.00
66518-5012	KF50	3/4"	40.00
66518-2516	KF25	1"	45.00
66518-4016	KF40	1"	45.00
66518-5016	KF50	1"	45.00

注:此产品示意图仅供参考,具体工艺及尺寸请咨询销售。
需求的螺纹规格不同在订购号最后一位加对应的螺纹首字母,如要KF25"1/4"NPT外螺纹,订购号为66518-2504-N。



Formed Bellows Ordering Information
成型波纹管订购信息

66701	-	0075	-	0275	-	0300	-	10

产品系列	
66701	可弯曲压缩(Formed Bellows)
66702	可弯曲不可压缩(Flexible Hoses)
66703	编织网波纹管(Flexible Braided Hoses)

终端A	
0050	KF10
0133	CF16
0075	KF16
0212	CF25
0100	KF25
0275	CF35
0150	KF40
0338	CF50
0200	KF50
0450	CF63
0250K	ISO63-K
0250F	ISO63-F
0250N	NW63
0462	CF80
0300K	ISO80-K
0300F	ISO80-F
0300N	NW80
0600	CF100
0400K	ISO100-K
0400F	ISO100-F
0400N	NW100
0675	CF130
0600K	ISO160-K
0600F	ISO160-F
0600N	NW160
0800	CF160
0800K	ISO200-K
0800F	ISO200-F
0800N	NW200
1000	CF200
1000K	ISO250-K
1000F	ISO250-F
1000N	NW250
1200	CF250
1200K	ISO320-K
1200F	ISO320-F
1200N	NW320
TW	直管对焊

终端B	
0050	KF16
0133	CF16
0075	KF16
0212	CF25
0100	KF25
0275	CF35
0150	KF40
0338	CF50
0200	KF50
0450	CF63
0250K	ISO63-K
0250F	ISO63-F
0250N	NW63
0462	CF80
0300K	ISO80-K
0300F	ISO80-F
0300N	NW80
0600	CF100
0400K	ISO100-K
0400F	ISO100-F
0400N	NW100
0675	CF130
0600K	ISO160-K
0600F	ISO160-F
0600N	NW160
0800	CF160
0800K	ISO200-K
0800F	ISO200-F
0800N	NW200
1000	CF200
1000K	ISO250-K
1000F	SO250-F
1000N	NW250
1200	CF250
1200K	ISO320-K
1200F	ISO320-F
1200N	NW320
TW	直管对焊

长度（mm）
xxxx

材质	
10	304
40	316L
HH	哈氏合金
TR	纯钛

说明

1、直管对焊端为英制规格，尺寸代码参见126页。
2、当端口B和端口A代码完全相同时，端口B代码将被省略。
3、>300mm的长度的需求，建议选择可弯曲不可压缩结构。
4、型号说明仅用于说明型号组成规则，有些组合实际并不存在。
如有疑问请联系迈格诺科销售代表。

Formed Bellows Technical Data
成型波纹管技术参数

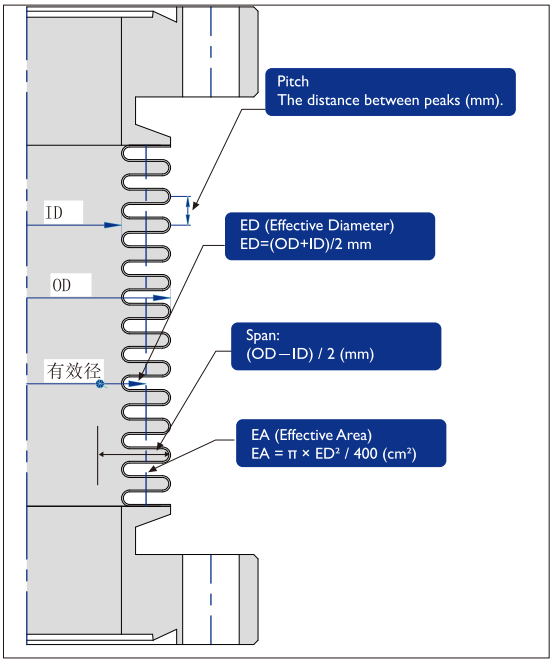

成型波纹管的应用场景

Utilizing Sealing Properties 真空系统应用	Installation Equipment (Linear/Rotary), Valves, Vacuum Seals, etc. 导入设备(直线・旋转)、真空阀门、真空密封等
Utilizing Volume Changes 容量变化应用	Pressure Switches, Temperature Switches, Accumulators, etc. 压力开关、温度开关、蓄能器等
Use as Piping 配管使用	Vibration Isolation, Heat Insulation, Flexible Joints, etc. 防振、隔热、柔性接头等
Others 其他	Absorption of Installation Errors 安装误差吸收

成形波纹管的材料及其特性
Materials for Formed Bellows and Their Characteristics

材料 Material	特性 Characteristics	优点 Advantages
SUS304、SUS316L	通用的不锈钢材材料 Common stainless steel	经济、常备库存、可快速交付 Low operating cost • Standard inventory • Fast delivery
Hastelloy®C-22	焊接性和延展性优异 Excellent weldability & ductility	耐腐蚀、耐热性能出色 Superior corrosion & heat resistance

※可为科研领域提供铝合金、钛合金等材质波纹管 。
※ Aluminum and titanium available for scientific applications upon request.

Structural Features
- ◆ U-shaped corrugated structure with excellent flexibility and compressibility (compression ratio up to 30%)
- ◆ Effectively absorbs high-frequency vibrations in piping systems
- ◆ Provides axial displacement compensation while maintaining sealing integrity

Usage Recommendations
- ◆ Recommended length: ≤300mm (excessive length may cause over-compression under vacuum conditions)
- ◆ Extreme compression may reduce product service life

Technical Advantages
- • Ultra-thin wall design
- • Superior dynamic sealing performance
- • Material options: 304/316L/C-22,
- • Leak rate: 1.33×10^{-9} mbar·L/s
- • End connection types: KF/ISO/CF/JIS & custom configurations available

结构特点
- ◆采用U型波形结构，具有优异的弯曲性与压缩性（极限压缩比达30%）
- ◆有效吸收管路系统高频振动
- ◆密封状态下可实现轴向位移补偿

使用建议
- ◆推荐适用长度：≤300mm（超长使用可能导致真空工况下过度压缩）
- ◆极限压缩会影响产品使用寿命

技术优势
- • 超薄壁厚设计
- • 动态密封性能优异
- • 304/316L/C-22 材质可选，
- • 漏率：$1.33*10^{-9}$ mbar*L/S.
- • 终端接口方式 KF/ISO/CF /JIS及非标定制。

Standard Dimensions And Performance Table

Type	Size	Dimensions, mm				Contraction Rate %
		ID	OD	Tickness	Pitch	
Formed Bellows	20A	19.80	30.00	0.15	3.50	±7
	25A	24.70	36.00	0.15	3.70	±15
	40A	39.70	54.00	0.15	4.50	±20
	50A	49.00	65.00	0.15	5.00	±20
	63A	63.00	85.00	0.20	7.00	±20
	80A	77.80	102.00	0.20	7.50	±20
	100A	99.60	126.00	0.20	8.00	±20
	125A	124.50	160.00	0.30	11.50	±20
	150A	149.40	176.00	0.25	11.50	±20
	200A	199.00	237.80	0.30	13.00	±20
	250A	248.00	289.00	0.30	12.30	±20
	300A	298.00	340.00	0.30	12.70	±20
	350A	350.00	397.00	0.30	17.00	±20

Flexible Hoses Technical Data
普通软管技术参数

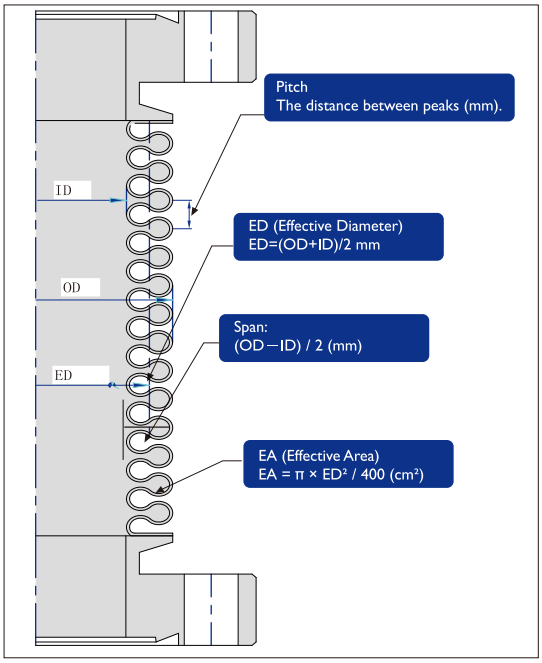

Ω型金属软管产品说明

典型应用

Utilizing Sealing Properties 真空系统应用	Vacuum pipeline connection, reducing stress deformation caused by piping errors 真空管路连接，降低配管误差产生的应力变形、误差吸收。
Utilizing Volume Changes 容量变化应用	Pressure Switches, Temperature Switches, Accumulators, etc. 压力开关、温度开关、蓄能器等
Use as Piping 配管使用	Vibration Isolation, Heat Insulation, Flexible Joints, etc. 防振、隔热、柔性接头等

技术参数

壁厚 Wall Thickness	0.2-0.4mm
漏率 Leak Rate	≤1.33×10^{-9} mbar·L/s
终端接口 End Connections	KF/ISO/CF/IN/TUBE (Custom designs supported)
材质 Material	304/316L/Hastelloy C-22
长度 Length	100-3000mm

Structural Features

- Ω-shaped corrugated profile with excellent bend-forming capability (non-compressible design)
- Effectively absorbs pipeline system vibrations
- Provides multi-directional displacement compensation (angular/lateral)
- Reduces installation stress and compensates for thermal expansion

结构特点

- 采用Ω型波形结构，具有优异的弯曲定型性能（不可压缩设计）
- 有效吸收管路系统振动
- 实现多向位移补偿（角度/侧向）
- 降低安装应力，补偿热膨胀

Standard dimensions and performance table

Type	Size	Dimensions, mm				Min. Bending Radius,mm		Max.working pressure.Mpa
		ID	OD	Tickness	Pitch	Constant Bending	Repeated Bending	Single Braid
Flexible Hoses	10A	10.00	14.30	0.20	2.70	45.00	180.00	7.40
	15A	15.00	20.00	0.20	3.10	50.00	210.00	3.30
	20A	20.50	28.00	0.20	4.50	65.00	230.00	3.70
	25A	26.90	35.50	0.20	5.30	70.00	240.00	2.60
	40A	40.50	52.00	0.25	6.50	100.00	330.00	2.80
	50A	54.50	67.00	0.25	7.00	130.00	365.00	2.00
	63A	63.00	84.00	0.25	9.00	170.00	545.00	2.00
	80A	77.80	98.00	0.25	9.50	200.00	600.00	1.80
	100A	99.80	118.00	0.25	11.00	240.00	750.00	1.40
	150A	151.00	180.00	0.40	12.00	350.00	970.00	1.00

Instructions common to flexible hoses and bellows

- These products are made from thin plates. Even insignificant impact may damage the products.
  For transportation, pack them with sufficient packaging materials, and handle them carefully during transportation.
- Store the products in a clean and dry room. Avoid contact with high moisture, saline matter and high lyacid atmosphere.
- Use them in the ranges specifi ed in drawings, delivery specifi cations and catalogs. If any product is used out of the design specifi cations, it may be damaged.
- Avoid using fluids which do not have corrosion resistance for each material.
- Do not expose the products directly to sparks from a welder or a grinder. When using a welder or a grinder near the products, appropriately protect them.
- If they are moved after installation or used as measures against vibration, fatigue cracks may develop in them in a short period.

Flexible hoses

- When installing any flexible hose, do not apply torsion to it. To prevent damage owing to torsion during installation, it is recommended to use a joint, such as a loose fl ange, union joint or SNM joint, which can prevent torsion at one end of the tube.
- Do not install any flexible hose in such a way that the tube is twisted when it is bent. Install the tube in such a way that it is constantly on a certain plane to prevent damage to the tube caused by torsion when it is bent.
- Avoid bending any flexible hose at a sharp angle. If a tube is installed improperly, the tube may be repeatedly bent at a sharp angle. If a tube is used at a radius lower than the allowable minimum bending radius, it will be fatigued early and damaged in a short period.
- Do not expand or contract any fl exible hose. Do not install a tube in an expanded or contracted condition exceeding the specified range.
- Reworking
  Avoid reworking any joint if possible. When reworking a joint, take care not to damage the hose or joint, and protect the hose to prevent entry of dust into the tube.
- Welding
  When welding a hose to a mating pipe joint, take utmost care that the hose is not thermally influenced. Otherwise, it may be distorted, or the material characteristics may be degraded, thereby resulting in early breakage.
- Examples of correct use and incorrect use

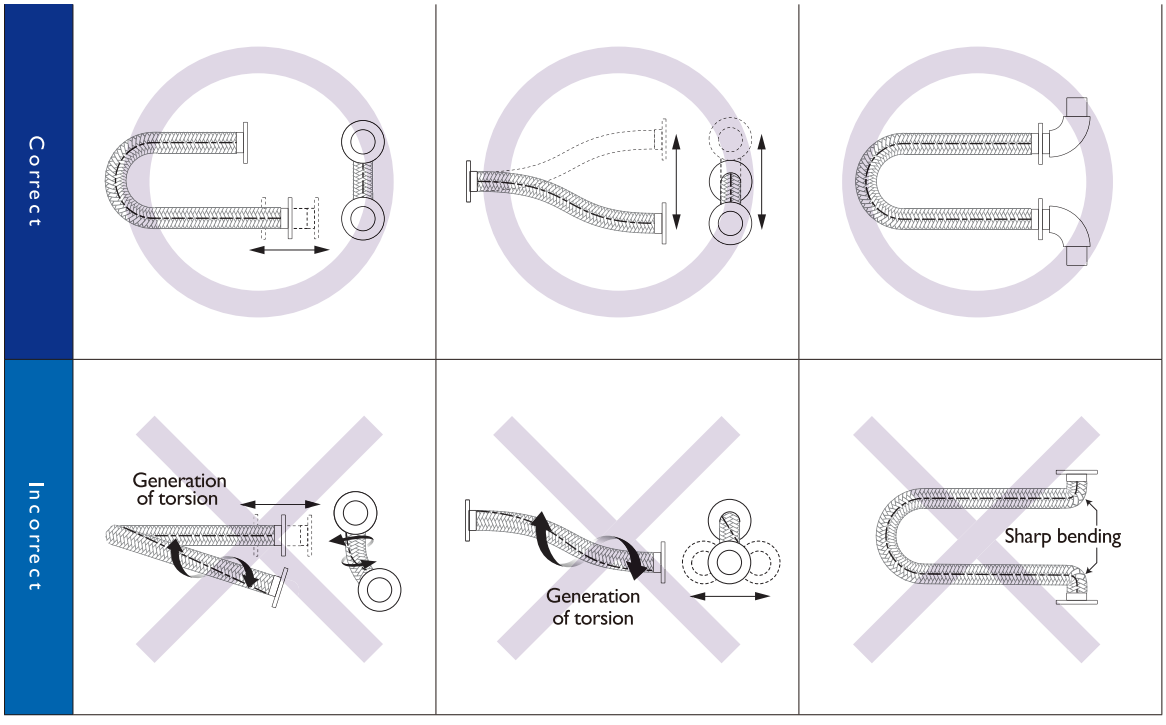

Basic Motions Of Bellows Expansion Joints
波纹管基本运动形式

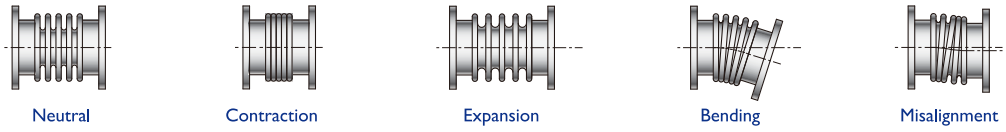

Examples Of Application Of Bellows Expansion Joints
应用实例介绍

Terms and symbols

Term	Description	Symbol
Main anchor	Must be resistant to the expansion joint thrust force and the spring reaction force.	
Slide anchor	Must be resistant to the expansion joint thrust force and the spring reaction force but does not restrain the force in the sliding direction.	
Intermediate anchor	Must be resistant to the spring reaction force of expansion joint.	
Guide	Pipe guide device for transmitting smoothly the necessary force for centering of expansion joint and pipe and movement in the axial direction to the anchor	
Direction of expansion of pipe		

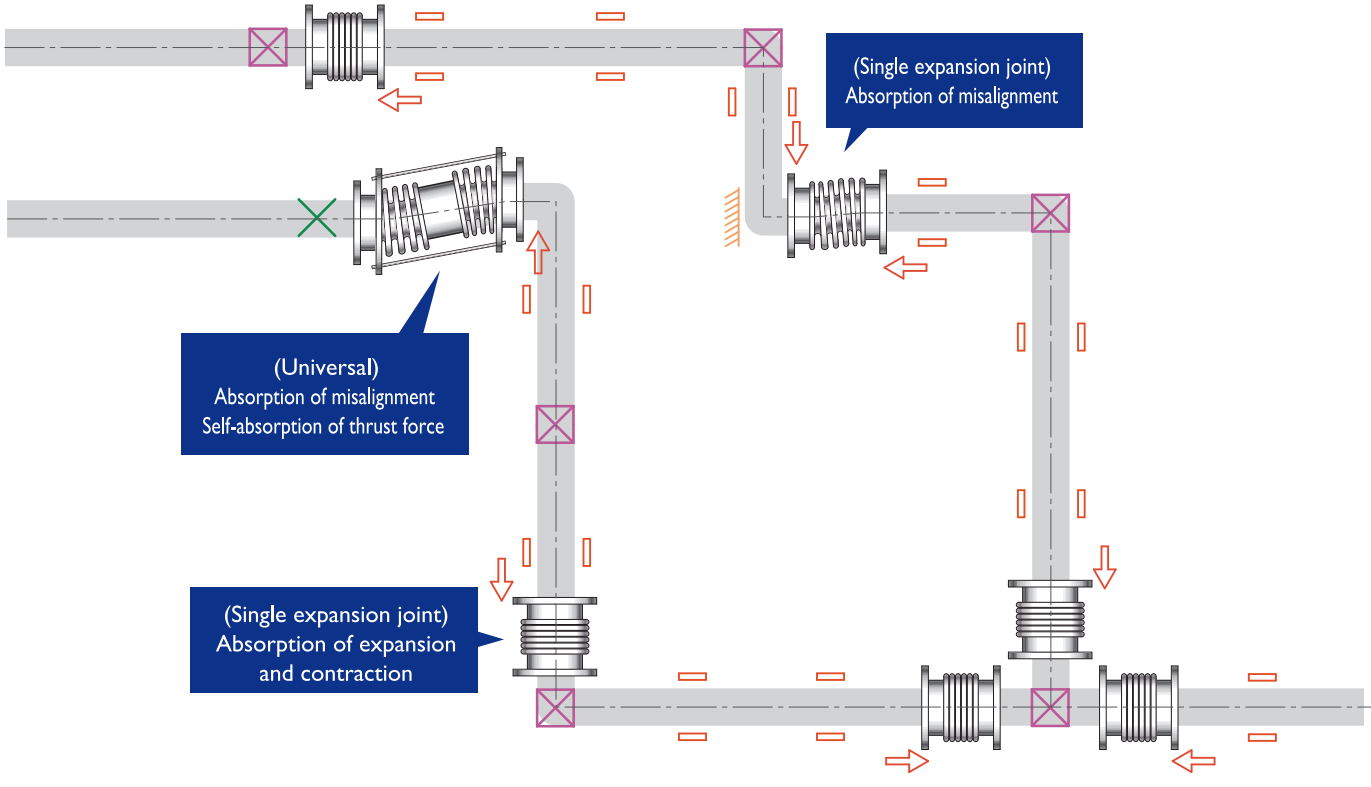

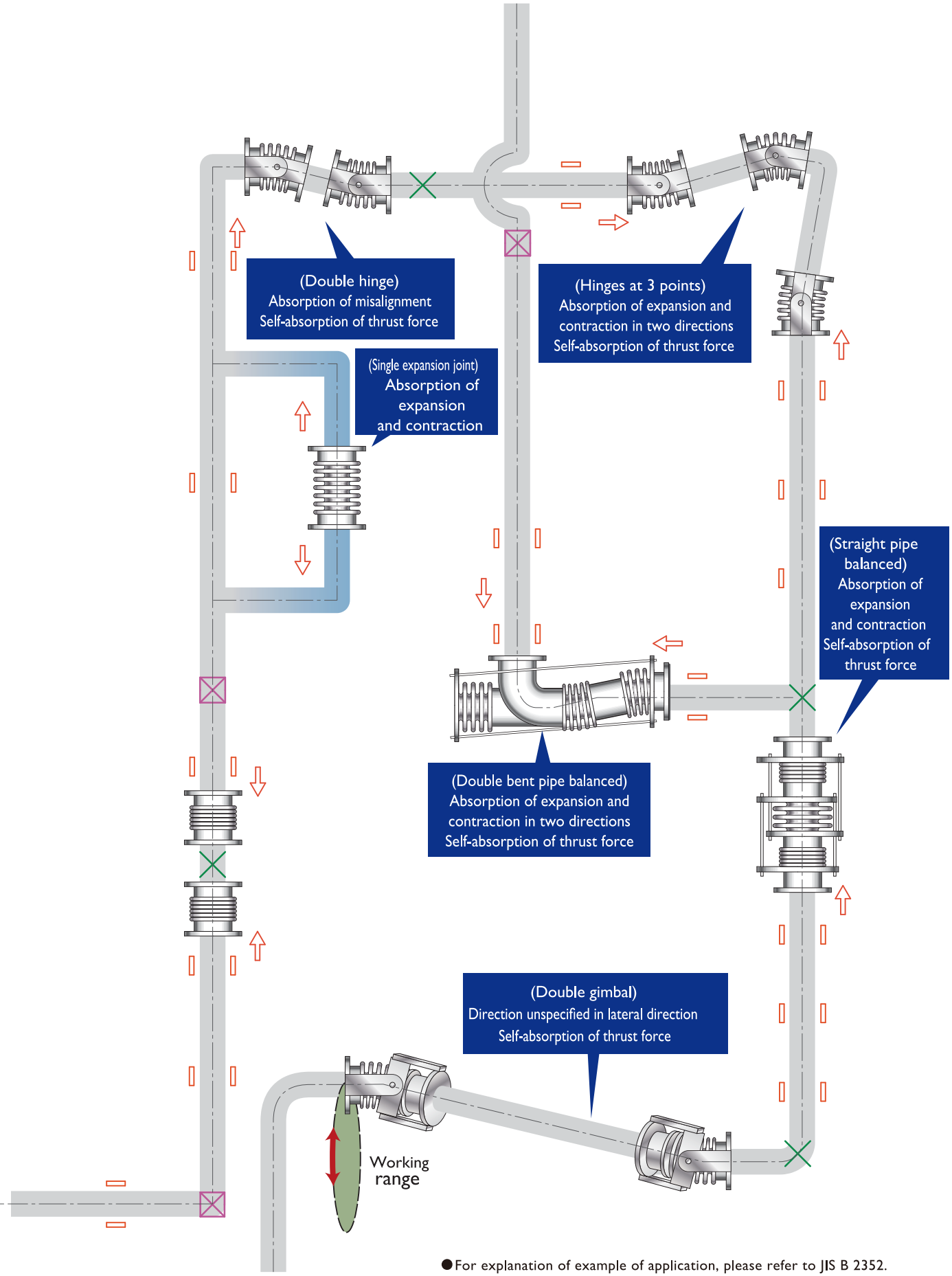

● For explanation of example of application, please refer to JIS B 2352.

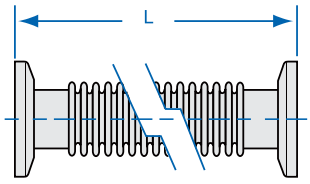

KF Bellows

Part Number	Flange Size	Dimensions, mm
		L
66701-0075	KF16	100/OPTION
66701-0100	KF25	100/OPTION
66701-0150	KF40	100/OPTION
66701-0200	KF50	100/OPTION

注：使用环境震动较大，长度短，位移量大，安装弯曲半径小时选择使用成型波纹管（66701），使用长度较长，环境震动小时选择使用普通金属软管（66702）。

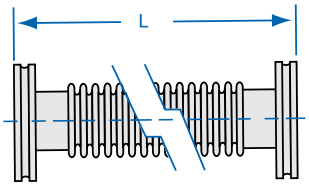

ISO Bellows

Part Number	Flange Size	Dimensions, mm
		L
66701-0250K	ISO-63	100/OPTION
66701-0300K	ISO-80	100/OPTION
66701-0400K	ISO-100	100/OPTION
66701-0600K	ISO-160	100/OPTION
66701-0800K	ISO-200	100/OPTION

注：使用环境震动较大，长度短，位移量大，安装弯曲半径小时选择使用成型波纹管（66701），使用长度较长，环境震动小时选择使用普通金属软管（66702）。

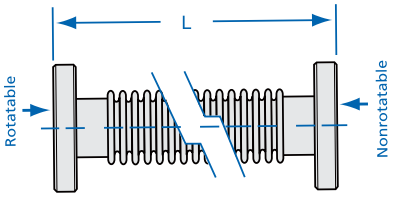

CF Bellows

Part Number	Flange Size	Dimensions, mm
		L
66701-0133	CF16	100/OPTION
66701-0275	CF35	100/OPTION
66701-0338	CF50	100/OPTION
66701-0450	CF63	100/OPTION
66701-0600	CF100	100/OPTION
66701-0800	CF160	100/OPTION

注：使用环境震动较大，长度短，位移量大，安装弯曲半径小时选择使用成型波纹管（66701），使用长度较长，环境震动小时选择使用普通金属软管（66702）。

KF Flexible Braided Hose

Part Number	Flange Size	Dimensions, mm	
		Wall Thickness	L
66703-0016	KF16	0.20	100/OPTION
66703-0025	KF25	0.20	100/OPTION
66703-0040	KF40	0.20	100/OPTION
66703-0050	KF50	0.20	100/OPTION

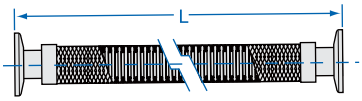

ISO Flexible Braided Coupling

Part Number	Flange Size	Dimensions, mm
		L
66703-0250K	ISO-63	200/OPTION
66703-0300K	ISO-80	200/OPTION
66703-0400K	ISO-100	200/OPTION
66703-0600K	ISO-160	200/OPTION
66703-0800K	ISO-200	200/OPTION
66703-1000K	ISO-250	200/OPTION
66703-1200K	ISO-320	200/OPTION

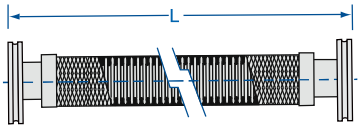

CF Flexible Braided Hose

Part Number	Flange Size	Dimensions, mm
		L
66703-0133	CF16	200/OPTION
66703-0275	CF35	200/OPTION
66703-0338	CF50	200/OPTION
66703-0450	CF63	200/OPTION
66703-0600	CF100	200/OPTION
66703-0800	CF160	200/OPTION

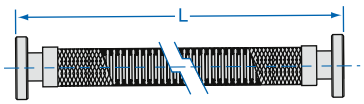

Vacuum Insulation Double-layer Flexible Hoses
真空双层绝热软管

Features

- Remarkably high flexibility
- The excellent heat insulating performance minimizes evaporation of the internal fluid.



Specifications

Material	Inner hose SUS316L
	Outer hose SUS304
Working pressure MAX	1.0 Mpa
Working temperature	MIN -200℃
Allowable leak rate	1.33×10-10 Pa · m3 /sec or less

Remarks

- Hoses for working pressure of higher than 1 MPa can be designed and fabricated.
- Hoses having length not shown in the L column can be fabricated.

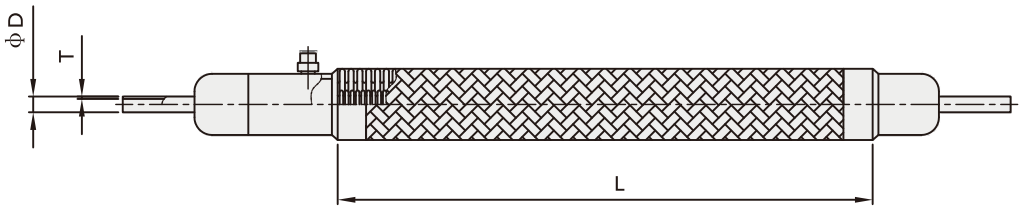

Standard dimensions

Part Number	Tube Size	Dimensions, mm			
		D	T	L	Min. bending radius
66713-0004	1/4"	6.35	1.0	1000~3000	250
66713-0006	3/8"	9.52	1.0	1000~3000	300
66713-0008	1/2"	12.7	1.2	1000~3000	300

UH Series Ultra-High Purity Hose
UH系列超高纯软管

Engineered with shape-memory capability to compensate for fixed joint misalignment in vacuum/low-pressure static applications while enabling pipeline routing adjustments. Specifically designed for high-temperature vacuum and low-pressure static environments.

专为高温真空及低压静态环境设计，具有形状记忆功能，可补偿固定接头错位并实现管路走向调整。
适用于真空或低压静态应用场景，在高温度真空和低压静态环境下表现卓越



Specifications

Material: 316L / 316LV+V / C-22
Leak Rate: ≤≤1.33×10^{-10} Pa·m³/s（He）
Temperature Range: –40°C to +537°C

材料：316L / 316LV+V / C-22
泄漏率：≤1.33×10^{-10} Pa·m³/s（氦气检测）
温度范围：-40°C 至 +537°C

Surface Finish

BA (Bright Annealed): Ra ≤0.6μm
EP (Electropolished): Ra ≤0.13μm
Cleaning: Deionized water cleaned, compliant with SEMI F19 & F20 standards
Packaging: ISO Class 5 cleanroom Double-layer vacuum packaging

BA（光亮退火）：表面粗糙度Ra ≤0.6微米
EP（电解抛光）：表面粗糙度Ra ≤0.13微米
清洗：经去离子水清洗，符合SEMI F19和F20标准
包装：ISO Class 5级洁净室双层真空包装

Standard dimensions and performance table

Type	Size	Dimensions, mm			Min. Bending Radius,mm		Max.working pressure.Mpa	
		ID	OD	Tickness	Constant Bending	Repeated Bending	Single Braid	NO Braid
UH Ultra-High Purity Hose	6A	6.00	9.60	0.15	30.00	128.00	4.00	Vacuum~0.8
	8A	8.50	12.50	0.15	40.00	190.00	3.70	Vacuum~0.6
	10A	10.00	14.20	0.15	45.00	180.00	3.30	Vacuum~0.5
	12A	12.00	16.90	0.15	50.00	210.00	3.00	Vacuum~0.5
	16A	16.20	21.70	0.18	55.00	260.00	2.80	Vacuum~0.3

订购信息
Ordering Information

66707 — 4 SW 8 VF — 0500 — C7 — 40 — F4 — C5

产品系列	
66707	UH 系列

终端接口尺寸	
4	1/4"
6	3/8"
8	1/2"
6M	6mm
8M	8mm
10M	10mm
12M	12mm

终端接口形式A	
TW	TUBE
SW	Lok
VM	Male VCR
VF	Fmale VCR
OF	Fmale VCO
OM	Male VCO
QF	Quick Fittings
NM	Male NPT
NF	Fmale NPT
PM	Male PT
PF	Fmale PT
GM	G螺纹外丝
GF	G螺纹内丝

终端接口尺寸	
4	1/4"
6	3/8"
8	1/2"
6M	6mm
8M	8mm
10M	10mm
12M	12mm

终端接口形式B	
TW	TUBE
SW	Lok
VM	Male VCR
VF	Fmale VCR
OF	Fmale VCO
OM	Male VCO
QF	Quick Fittings
NM	Male NPT
NF	Fmale NPT
PM	Male PT
PF	Fmale PT
GM	G螺纹外丝
GF	G螺纹内丝

长度（mm）
XXXX

金属编织网	
BLANK	不需要
C7	外加金属编织网

材质	
40W	316LV+V
H22	C-22
40	316L

内表面处	
BLANK	BA
F4	EP

包装环境	
BLANK	大气环境
C7	万级洁净间
C5	百级洁净间

说明

1、当终端接口B的尺寸和形式与接口A相同时，B的代码将被省略。

2、“选型说明”用于说明型号的组成规则，有些组合实际并不存在:如有疑问，请联系迈格诺科相关销售工程师。

MAGNOX

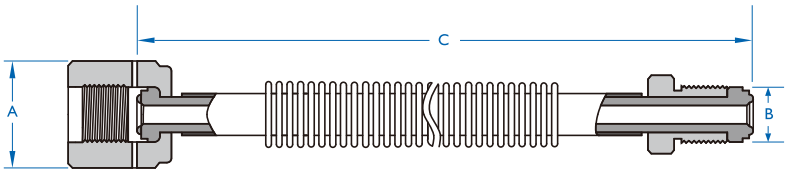

Inlet Type	Dimension,mm		
	A	B	C
Lok-Lok	1/4"Lok	1/4"Lok	OPTION
	3/8"Lok	3/8"Lok	OPTION
	1/2"Lok	1/2"Lok	OPTION
MVCR-MVCR	1/4"MVCR	1/4"MVCR	OPTION
	3/8"MVCR	3/8"MVCR	OPTION
	1/2"MVCR	1/2"MVCR	OPTION
FVCR-FVCR	1/4"FVCR	1/4"FVCR	OPTION
	3/8"FVCR	3/8"FVCR	OPTION
	1/2"FVCR	1/2"FVCR	OPTION
FVCR-MVCR	1/4"FVCR	1/4"MVCR	OPTION
	3/8"FVCR	3/8"MVCR	OPTION
	1/2"FVCR	1/2"MVCR	OPTION
FVCR-Lok	1/4"FVCR	1/4"Lok	OPTION
	3/8"FVCR	3/8"Lok	OPTION
	1/2"FVCR	1/2"Lok	OPTION
MVCR-Lok	1/4"MVCR	1/4"Lok	OPTION
	3/8"MVCR	3/8"Lok	OPTION
	1/2"MVCR	1/2"Lok	OPTION
TUBE-TUBE	1/4"TUBE	1/4"TUBE	OPTION
	3/8"TUBE	3/8"TUBE	OPTION
	1/2"TUBE	1/2"TUBE	OPTION

HF Series High Flexibility Metal Hose

HF系列高弹性金属软管

Specially designed for intermittent reciprocating applications requiring bending motions, it delivers superior flexibility and elastic performance compared to UH series hoses through optimized corrugation pitch and waveform structure design.

专为需要间歇性往复弯曲运动的工况设计，通过优化波距与波形结构设计，相较UH系列软管具有更卓越的柔韧性和弹性表现。

Features

Smaller bending radius

Specifically designed for intermittent reciprocating motion with bending requirements

Core Advantages

Fully Customizable Lengths

Enhanced operational efficiency

Extended service life

Reduced total operating costs

Specifications

Material: 316L / 316LV+V / C-22

Leak Rate: $\leq 1.33\times10^{-10}$ Pa·m³/s (He)

Temperature Range: –40°C to +537°C

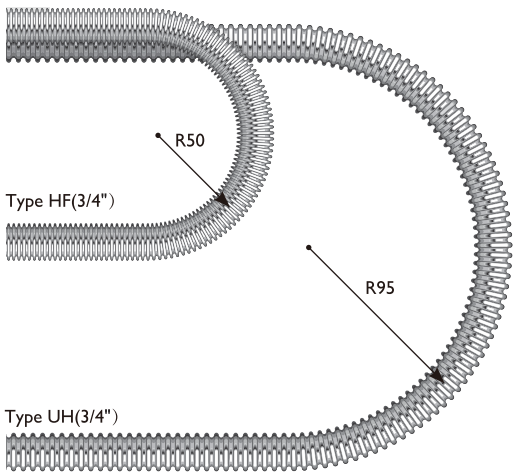

Standard dimensions and performance table

Type	Size	Dimensions, mm				Min. Bending Radius,mm		Max.working pressure.Mpa	
		ID	OD	Tickness	Pitch	Constant Bending	Repeated Bending	Single Braid	NO Braid
HF-High -Flexibility Metal Hose	6A	6.00	9.60	0.15	1.75	25.00	100.00	4.00	Vacuum~0.8
	8A	8.50	12.50	0.15	2.00	30.00	125.00	3.70	Vacuum~0.6
	10A	10.00	14.20	0.15	2.20	35.00	140.00	3.30	Vacuum~0.5
	12A	12.00	16.90	0.15	2.50	40.00	160.00	3.00	Vacuum~0.5
	16A	16.20	21.70	0.18	3.00	45.00	180.00	2.80	Vacuum~0.3

订购信息
Ordering Information

66717 — 4 VM — 0350 — WB — 40W — C5

产品系列	
66717	高柔性金属软管 HF 系列

终端接口尺寸		终端接口形式A	
4	1/4"	TW	TUBE
6	3/8"	SW	Lok
8	1/2"	VM	Male VCR
12	3/4"	VF	Fmale VCR
16	1"	OF	Fmale VCO
6M	6mm	OM	Male VCO
8M	8mm	QF	Quick Fittings
10M	10mm	NM	Male NPT
12M	12mm	NF	Fmale NPT
20M	20mm	PM	Male PT
25M	25mm	PF	Fmale PT
		GM	G螺纹外丝
		GF	G螺纹内丝

终端接口尺寸		终端接口形式B	
4	1/4"	TW	TUBE
6	3/8"	SW	Lok
8	1/2"	VM	Male VCR
12	3/4"	VF	Fmale VCR
16	1"	OF	Fmale VCO
6M	6mm	OM	Male VCO
8M	8mm	QF	Quick Fittings
10M	10mm	NM	Male NPT
12M	12mm	NF	Fmale NPT
20M	20mm	PM	Male PT
25M	25mm	PF	Fmale PT
		GM	G螺纹外丝
		GF	G螺纹内丝

长度(mm)
XXXX

金属编织网	
BLANK	不需要
WB	外加金属编织网

材质	
40	316L
H22	C-22

包装环境	
BLANK	大气环境
C7	万级
C5	百级

说明

1、当终端接口B的尺寸和形式与接口A相同时，B的代码将被省略。

2、“选型说明”用于说明型号的组成规则，有些组合实际并不存在:如有疑问，请联系迈格诺科相关销售工程师。

UHF Series Flexible Hose

UHF系列超高弹性软管

UF Series flexible hose features innovative structural design, delivering superior flexibility compared to conventional products. It is specifically engineered for high-frequency reciprocating motion applications.

UF系列柔性软管采用创新结构设计，相比传统产品具有更卓越的弯曲性能，专为高频往复运动应用而研发。

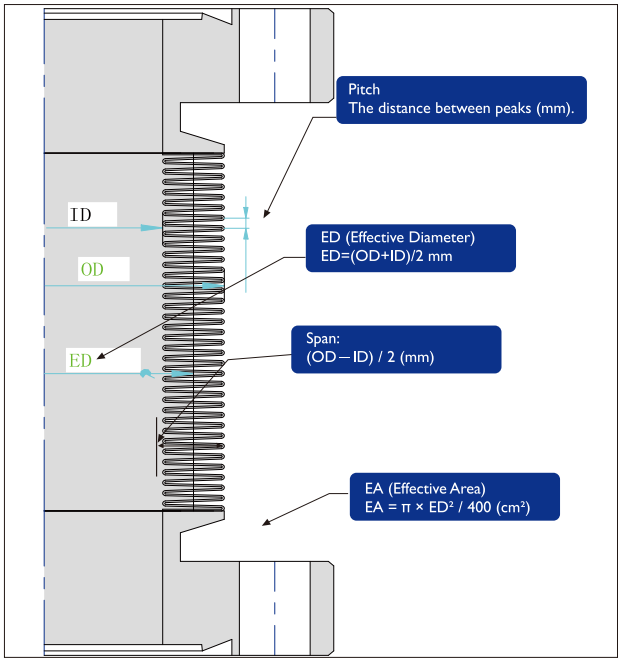

应用范围

Semiconductor	Wafer robots, vacuum gas systems
New Energy	Battery electrolyte control, coating machines
Robotics	Motion cable protection, welding cooling
Aerospace	Engine test hydraulic lines

半导体制造	适用场景：晶圆传输机械臂、真空腔室气体输送
新能源生产	锂电行业：电解液精准计量输送、涂布机液压回路
精密装备	工业机器人、高频运动拖链轨道电缆保护、气体、液体输送管路
航空航天	飞机引擎液压测试台脉冲管路

技术参数

Wall Thickness	0.15-0.2 mm
Leak Rate	≤1.33×10^{-9} mbar·L/s
End Connection	KF/ISO/CF/JIS/TUBE/VCR (Custom designs available)
Material	304/316L/Hastelloy C-22
Length	Custom lengths

壁厚	0.15-0.2mm
漏率	≤1.33×10^{-9} mbar·L/s
终端接口	KF/ISO/CF/JIS/TUBE /VCR(支持非标定制)
材质	304/316L/Hastelloy C-22
长度	任意长度



Standard dimensions and performance table

Type	Size	ID	OD		Dimensions, mm		Min. Bending Radius,mm		Max.working pressure.Mpa	
			No braid	Single braid	Tickness	Pitch	Constant Bending	Repeated Bending	Single Braid	NO Braid
Ultra-High Flexibility Metal Hose	1/4	4.80	9.00	10.50	0.15	0.60	30.00	60.00	16.00	Vacuum~0.5
	3/8	9.40	14.00	15.50	0.15	060	45.00	65.00	11.00	Vacuum~0.3
	1/2	11.50	16.50	18.00	0.15	0.70	45.00	70.00	10.00	Vacuum~0.2
	3/4	20.70	30.50	32.00	0.20	1.00	50.00	85.00	3.50	Vacuum ~ Atmosphericpressure
	1	25.50	37.00	38.50	0.20	1.20	70.00	95.00	2.00	Vacuum ~ Atmospheric pressure

订购信息
Ordering Information

66716	—	4	VM	—	0350	—	WB	—	40W	—	C5

产品系列	
66716	超高柔性金属软管 UF 系列

终端接口尺寸		终端接口形式A	
4	1/4"	TW	TUBE
6	3/8"	SW	Lok
8	1/2"	VM	Male VCR
12	3/4"	VF	Fmale VCR
16	1"	OF	Fmale VCO
6M	6mm	OM	Male VCO
8M	8mm	QF	Quick Fittings
10M	10mm	NM	Male NPT
12M	12mm	NF	Fmale NPT
20M	20mm	PM	Male PT
25M	25mm	PF	Fmale PT
		GM	G螺纹外丝
		GF	G螺纹内丝

终端接口尺寸		终端接口形式B	
4	1/4"	TW	TUBE
6	3/8"	SW	Lok
8	1/2"	VM	Male VCR
12	3/4"	VF	Fmale VCR
16	1"	OF	Fmale VCO
6M	6mm	OM	Male VCO
8M	8mm	QF	Quick Fittings
10M	10mm	NM	Male NPT
12M	12mm	NF	Fmale NPT
20M	20mm	PM	Male PT
25M	25mm	PF	Fmale PT
		GM	G螺纹外丝
		GF	G螺纹内丝

长度(mm)
XXXX

金属编织网	
BLANK	不需要
WB	外加金属编织网

材质	
40	316L
H22	C-22

包装环境	
BLANK	大气环境
C7	万级
C5	百级

说明

1、当终端接口B的尺寸和形式与接口A相同时，B的代码将被省略。

2、“选型说明”用于说明型号的组成规则，有些组合实际并不存在:如有疑问，请联系迈格诺科相关销售工程师。

UHF Series Flexible Hose



PVC Hoses & Teflon Bellows

MAGNOX

PVC Hoses with NW Flanges

Part Number	Flange Size	Dimensions, mm
		L
66714-0016	KF16	100/OPTION
66714-0025	KF25	100/OPTION
66714-0040	KF40	100/OPTION
66714-0050	KF50	100/OPTION

可按照需求定制任意长度。例如，需定制KF25 L=750mm,订购号为66714-0025-0750

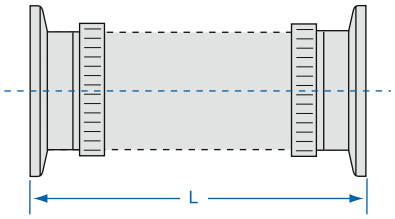



Teflon Bellows with NW Flanges

Part Number	Flange Size	Dimensions, mm
		L
66709-0016	KF16	100/OPTION
66709-0025	KF25	100/OPTION
66709-0040	KF40	100/OPTION
66709-0050	KF50	100/OPTION

可按照需求定制任意长度。例如，需定制KF25 L=750mm,订购号为66709-0025-0750





Introduction To Welded Metal Bellows
金属焊接波纹管介绍

Welded metal bellows are flexible connecting elements between vacuum flanges or end fittings of any kind. The welded metal bellow is not a rigid body but can overcome a specified working stroke. Three main fields of application can be identifed: as feedthrough, as expansion joint or as vibration isolator.



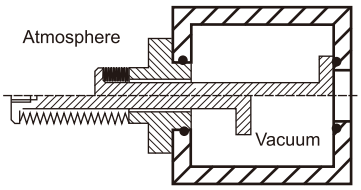

welded metal bellows can serve as feedthroughs to introduce movements into the vacuum or to separate the vacuum chamber from mechanical parts.



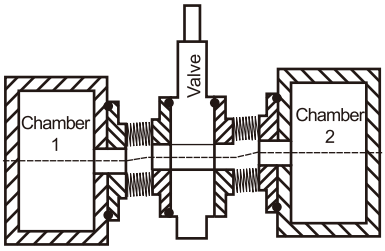

welded metal bellows can serve as compensators to balance thermal expansion and mounting tolerances (e.g.height differences or angular offsets).



welded metal bellows are often used for vibration decoupling,e.g., between vacu.um pump and measuring instrument. A special design of the compensator causes a better vibration isolation by an increased number of diaphragm pairs, but enlarges the risk of self-resonance.

Advantages Of Welded Metal Bellows
金属焊接波纹管的优点

- High flexibility
- Lowest assembly dimension
- For highest demands in UHV applications
- Lower spring forces
- Variable web width (OD-ID)
- Almost unlimited bellow length
- Non-circular shapes available (racetrack, rectangular)

Comparison Of Welded Metal Bellows And Flexible Hoses
金属焊接波纹管与柔性软管比较

In comparison to flexible hoses which are made of a thin-walled, partly bead welded and hydraulically formed tube, welded metal bellows can execute significantly larger lateral, axial, and angular motions in relation to their size. They also have a lower spring rate.



welded metal bellows

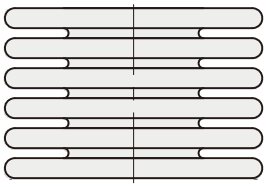

Flexible hose

Types Of Movements

动作类型

The following movements are possible:

- Axial
- Lateral
- Angular

Any combination of these kinds of movements is possible.
The individual types of movements are briefly explained below:

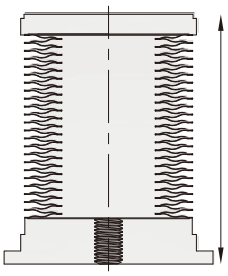

Axial

The flange surfaces are in parellel position and move towards each other,Thereby, no deflection in lateral direction is executed.The axial stroke is attenuated to achieve higher service life, i. e., a streched stroke should not occur at high-cycle bellows.

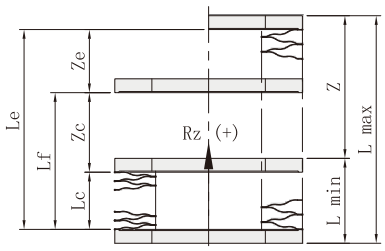

Abbreviations axial

Rz +	positive direction of force
Lf	free bellow length (without end fittings)
Lc	compressed bellow length = min. assembly dimension without end fittings
Le	stretched bellow length = max. assembly dimension without end fittings
Lmin	min. assembly dimension incl. end fittings from seal to seal
Lmax	max assembly dimension incl.end fittings from seal to seal
Z	axial stroke according to specification

Lateral

The flange surfaces shift sideways during lateral movement while always remaining parallel.
The maximal lateral stroke of an edge welded bellow depends on the assembly length.

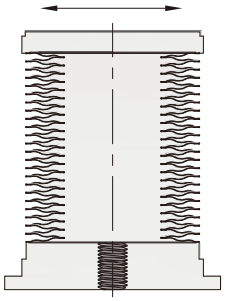

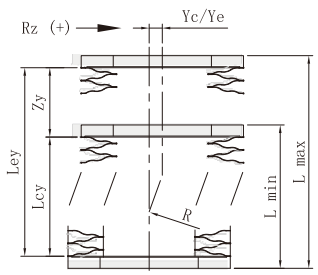

Abbreviations lateral

Ry +	positive direction of force
Yc	lateral stroke at Lcy
Ye	lateral stroke at Ley
Lcy	min. bellow length at given lateral stroke
Ley	max. bellow length at given lateral stroke
Lmin	min. assembly dimension incl. end fittings from seal to seal
Lmax	max. assembly dimension incl. end fittings from seal to seal
Zy	possible axial stroke at given lateral stroke Yc/Ye

Angular

The center axis of the bellow forms a bend with the radius “R" at angular movement(see figure). Not only the angle of rotation but also the location of the center of rotation is very important for dimensioning.

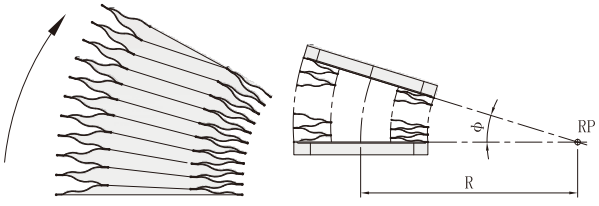

Key angular

RP	the center of the bow of the bellow axis results from Ic and Ie
R	Rradius of the bellow axis
Φ	angle between the flange surfaces according to specification
Φ/MP	angular stroke per convolution, catalog value
n	number of convolutions

Φ=Φ/MPxn

Design And Connectors
连接设计

Depending on the application, welded metal bellows consist of a number of moulded thin metal plates (diaphraams) which are welded together alternately at their inner or outer diameter. Two of these at the inner diameter welded plates form a convolution.

Usually, bellows will not be supplied without solid connections, so-called end fitings. The weld seam between the bellow and the end fitting needs a special preparation.

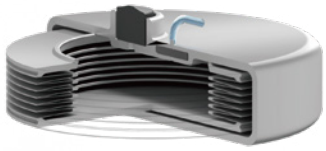





Materials
材料

We offer welded metal bellows and the appropriate flanges and end fittings in different materials. We use stainless steel 1.4435(AISI 316L) as standard for welded metal belows. The flanges and end fittings can be made from stainless steel 304, 304L.or 316L. if a very low magnetic permeability μr ≤1.005 is required, the flanges can be made of stainless steel 1.4429 in ESR quality. For welded metal bellows of AM350 we use flanges and end fittings from stainless steel 316L.

in addition, the special material Titanium Grade 1 can be used if the welded metal bellows are used in an especially corrosive environment in this case the flanges have to be made of Titanium Grade 1. Edge welded bellows of a nickel-based alloy (Haynes 242) are applicable for processes with temperatures up to 600 °C, depending on the environmental conditions even up to 1000 °C The appropriate flanges will be manufactured of the nickel-based alloy AU600.

Standard materials

SUS 316L : austenitic stainless steel (C: < 0.03 %; Cr: 1 % - 18 %; Ni: 10 % 14 %)
magnetic permeability μr ≤ 1.1; good weldability; good corrosion resistance; operation temperature up to +450 °C; suitable for cryogenic capplications; for applications up to 500,000 cycles

AM 350 : mostly austenitic Cr-Ni steel with ca. 10 % ferrite, thus higher magnetic permeability; good weldability; nonresistantto anorganic acids; operation temperature up to +250°C; not suitable for cryogenic applications; due to high elasticity and stability suitable up to 10 million cycles

Special materials (longer delivery time than standard materials)

Titanium Grade 1: pur titanium, nonalloy; lowest magnetic permeability; cannot be welded to other materials; good corrosionresistance; embrittles at temperatures above +350°C
Nickel-based alloys (Haynes 242, Hastelloy®,,Inconel®,,AU600): alloy on nickel basis; ;difficult to weld (if so, higher leak rates canresult): excellent resistance in oxidizing and reductive media: operation temperature to +1000°C , in corrosive environment to ca, +600°C

Important hint: The choice of material has to be made based on the specific requirements of the application

Standard Edge Welded Bellows
标准焊接波纹管

KF Flanges Edge Weld Bellows

Part Number	Flange Size	Dimensions, mm
		L
66710-0075	KF16	100/OPTION
66710-0100	KF25	100/OPTION
66710-0150	KF40	100/OPTION
66710-0200	KF50	100/OPTION

注：行程及内外径参数可非标定制，如有需求请联系迈格诺科销售代表。

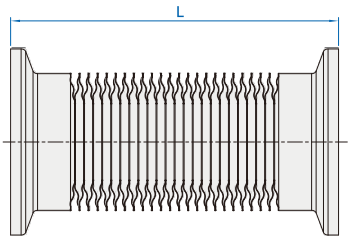

ISO Flanges Edge Weld Bellows

Part Number	Flange Size	Dimensions, mm
		L
66710-0250K	IS063	100/OPTION
66710-0300K	IS080	100/OPTION
66710-0400K	IS0100	100/OPTION
66710-0600K	IS0160	100/OPTION
66710-0800K	IS0200	100/OPTION

注：行程及内外径参数可非标定制，如有需求请联系迈格诺科销售代表。

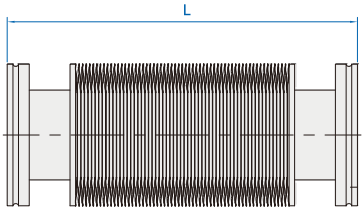

CF Flanges Edge Weld Bellows

Part Number	Flange Size	Dimensions, mm
		L
66710-0133	CF16	100/OPTION
66710-0275	CF35	100/OPTION
66710-0338	CF50	100/OPTION
00710-0450	CF63	100/OPTION
66710-0600	CF100	100/OPTION
66710-0800	CF160	100/OPTION

注：行程及内外径参数可非标定制，如有需求请联系迈格诺科销售代表。

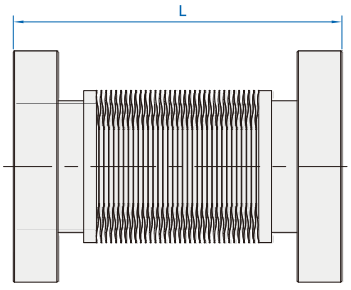

Service And Repair
服务和维修



Besides the manufacturing of custom edge welded bellows, we deliver replacement bellows. In addition, we are able to offer the repair of damaged bellows. This includes bellow feedthroughs of valve drives, coupling elements, manipulators, etc.

A drawing, a precise sketch or a photo, if available, is essential for quotation. You can also send a sample or the damaged bellow for the estimation of costs. In this case, please contact us before shipping, so we can start working immediately on receipt of the goods.

Notes

The following criteria have to be considered:

◆ **Conditions of surrounding area**
Bake-out temperature, operating press ure, operating temperature, possible torsion and the inspection pressure affecting the life cycle directly.

◆ **Vacuum inside the welded metal bellow (outside overpressure)**
Edge welded bellows are stabilized by the vacuum inside. They can be up to ten times as long as the outside diameter in case of horizontal installation. However, the bellow will become unstable in case of zero pressure difference.

◆ **Vacuum outside the welded metal bellow (inside overpressure)**
In this case the bellow is very unstable and will buckle soon. The bellow needs to beaxially stabilized by guiding elements.

◆ **Horizontal installation of long welded metal bellows**
The deflection of the edge welded bellows has to be considered especially in this installation position.
It is recommended to split the bellows with intermediate rings into fragment bellows and put up the intermediate rings into a guidance system.

◆ **Vertical installation of long welded metal bellows**
It needs to be considered that the diaphragm on top always has to carry the weight of the whole edge welded bellow. Therefore, the edge welded bellow should also be splitinto segments by intermediate rings and should be released by rods or wire for traction relief.



Product Application Industry
产品应用行业

Welded Metal Bellows is widely used throughout the manufacturing industry.

Because high levels of weld quality control and reliability are required,

High End Market is dominated by only few leading companies national market, including MAGNOX.

- Maintain internal and external sealing of the product
- Tilt and swivel, compression and stretching is possible
- High durability in a high temperature, a high pressure, and a corrosive environment

Application



Automotive Systems



Aviation/Aerospace Systems



Implantable Medical Devices



Irrigation Processes



Semiconductor Manufacturing



Commercial Batteries



Relay Cases



Accelerator

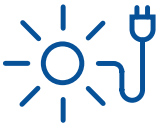

Energy(Solar)



Oil & Gas



Hydrogen

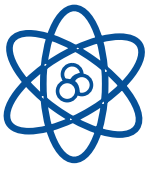

Nuclear



Weapon Systems



Chemical



FPD



High Speed Train

Welded Metal Bellows Design Request
焊接波纹管设计式样委托书

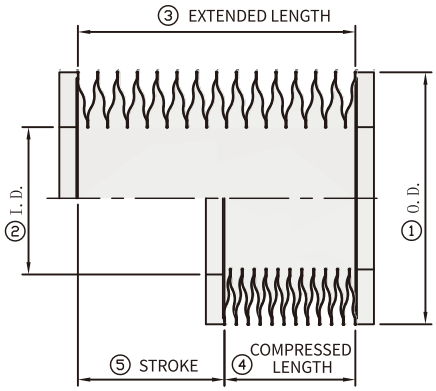

① Bellows Capsule Maximum O.D.: _____ mm
波纹管最大外径:

② Bellows Capsule Minimum I.D.: _____ mm
波纹管最小内径:

③ Extended Length: _____ mm
伸展长度(EL):

④ Compressed Length: _____ mm
压缩长度(CL):

⑤ Stroke(EL~CL): _____ mm
行程:

⑥ Install length: _____ mm
安装长度:

⑦ Life Cycle: _____ cycle
寿命:

⑧ Vacuum Side : Inside _____ kg/cm^2.
真空端: 内部

Outside _____ kg/cm^2
外部

⑨ Temperature: _____ ℃
使用温度:

⑩ Gas or Fluid: _____
腔体内使用流体(气体/液体):

⑪ Leak Rate : _____ $pa*m^3/s$ He
泄漏率:

⑫ Bellows Capsule Material: _____
波纹管材料:

⑬ Flange material: _____
法兰材料:

⑭ Spring rate: _____ /mm
弹性系数:

⑮ Shaft size: _____ mm
波纹管内部轴直径:

⑯ Installation:Vertical( ) Horizonal( )
安装方向: 垂直方向 水平方向

⑰ Process or equipment : _____
工程或设备名称:

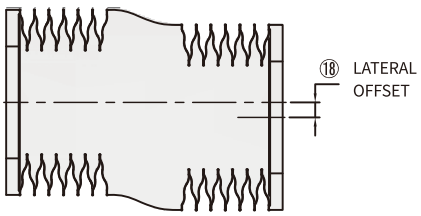

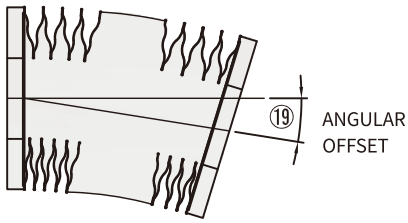

⑱ Lateral Offset: _____ mm
侧向偏移:

⑲ Angular Oifset: _____ deg
角度偏移:

※ memo 其他事项要求




MAGNOX

Chemical Composition (%)
化学成分

ASTM 标准	C	Si	Mn	P	S	Ni	Cr	Mo
304	≦ 0.080	≦ 1.00	≦ 2.00	≦ 0.045	≦ 0.030	8.00 – 11.00	18.00 – 20.00	-
304L	≦ 0.035	≦ 1.00	≦ 2.00	≦ 0.045	≦ 0.030	8.00 – 12.00	18.00 – 20.00	-
316	≦ 0.080	≦ 1.00	≦ 2.00	≦ 0.045	≦ 0.030	10.00 – 14.00	16.00 – 18.00	2.00 – 3.00
316L	≦ 0.035	≦ 1.00	≦ 2.00	≦ 0.045	≦ 0.030	12.00 – 16.00	16.00 – 18.00	2.00 – 3.00
316L VAR	0.015 – 0.030	≦ 1.00	1.00 – 1.50	≦ 0.045	0.005 – 0.012	12.00 – 16.00	16.00 – 18.00	2.00 – 3.00
316L VIM+VAR	0.015 – 0.030	≦ 1.00	0.15 – 0.40	≦ 0.045	0.005 – 0.010	12.00 – 16.00	16.00 – 18.00	2.00 – 3.00

Characteristics
材料特性

	机械							抗氧化临界温度	
ASTM	拉伸强度 (N/mm^2)	屈服强度 (N/mm^2)	延伸率 (%)	比重	热膨胀 X 10-6 0 - 100°C	比电阻 (10-8Ωm)	比热 0 - 100°C kj / (kg. °C)	连续使用 (°C)	间歇使用 (°C)
304	≧ 520	≧ 205	≧ 30	7.93	17.3	72	0.5	900	810
304L	≧ 480	≧ 175	≧ 30	7.93	17.3	72	0.5	900	810
316	≧ 520	≧ 205	≧ 30	7.98	16.0	74	0.5	900	810
316L	≧ 480	≧ 175	≧ 30	7.98	16.0	74	0.5	900	810

Cleaned Quality Assurance Values
清洁质量保证值

检测项目	保证值					
	AP	等级	BA 等级	MP + EP 等级	EP	等级
含油量测定	≦ 0.1mg/ft²		≦ 0.01mg/ft²			
颗粒计数	≦ 0.3μm 颗粒的数量 ≦ 5/cf		≦ 0.1μm 颗粒的数量 ≦ 5/cf		≦ 0.1μm 颗粒的数量 ≦ 5/cf	
液体电阻率测量	-		≧ 0.5MΩ-cm			
离子色谱分析	-		≦ 10ng/cm²		≦ 5ng/cm²	
露点测量	-		≦ -75°C			

Dimensional Tolerance
尺寸公差

Item	Products	Normal Pipe Size				
		1/8" ~ 3/8"	8A ~ 10A 1/2" ~ 3/4"	15A ~ 65A 1" ~ 3"	80A ~ 200A 4" ~ 6"	250A ~ 300A
Pipe Fitting Header Joint-Header Multi-Tee	Outside Diameter at End (OD)	±0.1mm	±1%			
	Wall Thickness at End (T)	Either Bigger ±0.2mm or ±20%				
	Straight End Length (L)	+ Not Specified - 0.4mm				
	Thinning Length (J)	+ Not Specified - 0				
Elbow, D-Elbow	Bend Radius (R)	±0.8mm		±1.6mm		±3.2mm
Elbow, D-Elbow, Tee, Joint-Tee D-Tee, Header Joint-Header, Multi-Tee	Center to End (A·B ·C ·M)	±0.8mm		±1.6mm		±3.2mm
Lap Joint Pipe Flange	Length (FF FP)	±0.8mm		±1.6mm		±3.2mm
Cap, 180° Return Bend	Back to End (E, BH)	±0.8mm		±3.2mm		
Reducer, Cap Reducer J-Reducer, J-Cap Outside-Diameter-Changeable Fitting Wall-Thickness-Changeable Fitting	Over All Length (H, Q)	±0.8mm		±1.6mm		±3.2mm
Lap Joint	Thickness of Lap (t)	10A		+1.6mm - 0		
	Diameter of Lap (G)	10A		+0mm - 0.8		+0mm -1.6
Header Joint-Header Multi-Tee	Length of End (EL)	±1.6mm				
	Branch Pitch (P)	±1.6mm			±3.2mm	
	Total Length (L)	+5mm -0				

Tube Fittings Ordering Information
管件订购信息

S40	—	66754	—	0150 0100	—	F4

材质	
W40	SUS316L焊管
W10	SUS304焊管
S40	SUS316L无缝管
S10	SUS304 无缝管
S40V	SUS316L VAR无缝管
S40W	SUS316L VIM+VAR无缝管

产品系列	
66751	180°Elbow
66752	45°Elbow
66760	90°Elbow
66761	90°Mitered Elbow
66762	Reducer
66753	Equal Tee
66754	Reducer Tee
66755	4 Way Crosses
66756	5 Way Crosses
66757	6 Way Crosses
66758	Reducer Crosses

主管尺寸		支管尺寸	
0050	1/2"	0050	1/2"
0075	3/4"	0075	3/4"
0100	1"	0100	1"
0150	1 1/2"	0150	1 1/2"
0200	2"	0200	2"
0250	2 1/2"	0250	2 1/2"
0300	3"	0300	3"
0400	4"	0400	4"
0600	6"	0600	6"

表面处理	
BLANK	BA Ra≤0.8μm
F1	BA Ra≤0.13μm
F2	BA Ra≤0.18μm
F3	BA Ra≤0.25μm
F4	EP Ra≤0.375μm
F5	MP Ra≤0.8μm
F6	AP Ra≤2.50μm

说明

1、支管尺寸选项仅适用于三通和大小头，当支管尺寸与主管尺寸相同时，支管尺寸代码将被省略。

2、型号说明仅用于说明型号组成规则，有些组合实际并不存在；

如有疑问请联系迈格诺科销售代表。

180° Return Bend Radius Elbows

Part Number	Dimensions, mm		
	Tube OD	Wall Thickness	A
66751-0050	12.70	1.24	19.05
66751-0075	19.05	1.65	28.70
66751-0100	25.40	1.65	38.10
66751-0150	38.10	1.65	57.15
66751-0200	50.80	1.65	76.20

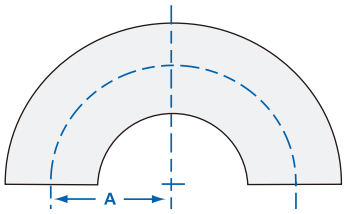

45°Radius Elbows

Part Number	Dimensions, mm			
	Tube OD	Wall Thickness	A	B
66752-0050	12.70	1.24	7.87	19.05
66752-0075	19.05	1.65	11.91	28.70
66752-0100	25.40	1.65	15.75	38.10
66752-0150	38.10	1.65	23.62	57.15
66752-0200	50.80	1.65	31.50	76.20
66752-0250	63.50	1.65	39.37	95.25
66752-0300	76.20	1.65	47.24	114.30
66752-0400	101.60	2.11	63.25	152.40
66752-0600	152.40	2.77	94.74	228.60

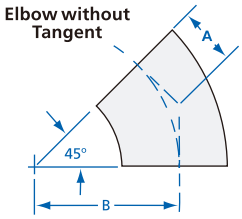

90° Radius Elbows

Part Number	Dimensions, mm			
	Tube OD	Wall Thickness	A	B
66760-0050	12.70	1.24	19.05	19.05
66760-0075	19.05	1.65	28.63	28.70
66760-0100	25.40	1.65	3810	38.10
66760-0150	38.10	1.65	57.15	57.15
66760-0200	50.80	1.65	76.20	76.20
66760-0250	63.50	1.65	95.25	95.25
66760-0300	76.20	1.65	114.30	114.30
66760-0400	101.60	2.11	152.40	152.40
66760-0600	152.40	2.77	228.60	228.60

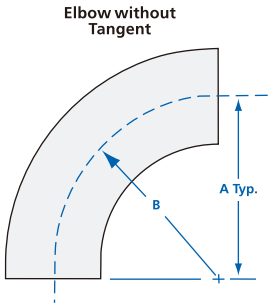

90° Mitered Elbow

Part Number	Dimensions, mm		
	Tube OD	Wall Thickness	A
66761-0075	19.05	0.89	25.40
66761-0100	25.40	1.65	47.75
66761-0150	38.10	1.65	57.15
66761-0200	50.80	1.65	76.20
66761-0250	63.50	1.65	76.20
66761-0300	76.20	1.65	82.55
66761-0400	101.60	2.11	98.55
66761-0600	152.40	2.77	127.00

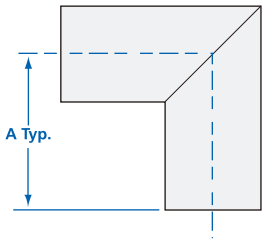

Conical Reducers

Part Number	Dimensions, (in.)		
	Tube OD 1	Tube OD 2	A
66762-100075	1	¾	35.05
66762-150075	1½	¾	60.45
66762-150100	1½	1	60.45
66762-200100	2	1	60.45
66762-200150	2	1½	60.45
66762-250150	2½	1½	60.45
66762-250200	2½	2	60.45
66762-300150	3	1½	91.95
66762-300200	3	2	91.95
66762-300250	3	2½	91.95
66762-400150	4	1½	91.95
66762-400200	4	2	91.95

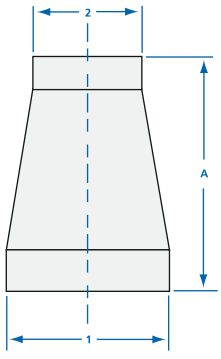

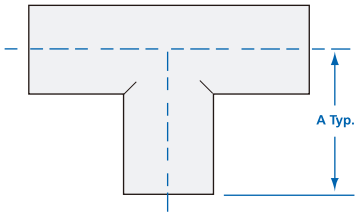

Tees

Part Number	Dimensions, mm		
	Tube OD	Wall Thickness	A
66753-0050	12.70	1.24	19.05
66753-0075	19.05	1.65	25.40
66753-0100	25.40	1.65	47.75
66753-0150	38.10	1.65	5715
66753-0200	50.80	165	76.20
66753-0250	63.50	1.65	76.20
66753-0300	76.20	1.65	82.55
66753-0400	101.60	2.11	98.40
66753-0600	152.40	2.77	127.00

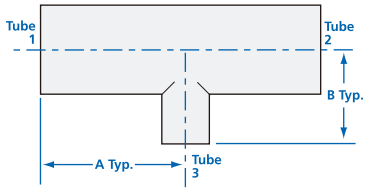

Reducer Tees

Part Number	Dimensions, mm			
	Tube 1 & 2 Arm od	Tube 3 Leg od	A	B
66754-100050	25.40	12.70	47.75	25.40
66754-100075	25.40	19.05	47.75	28.45
66754-150050	38.10	12.70	57.15	31.75
66754-150075	38.10	19.05	57.15	35.05
66754-150100	38.10	25.40	57.15	54.10
66754-200050	50.80	12.70	76.20	38.10
66754-200075	50.80	19.05	76.20	41.40
66754-200100	50.80	25.40	76.20	60.45
66754-200150	50.80	38.10	76.20	63.50
66754-250150	63.50	38.10	76.20	69.85
66754-250200	63.50	50.80	76.20	82.55
66754-300150	76.20	38.10	82 55	76.20
66754-300200	76.20	50.80	82.55	88.90
66754-300250	76.20	63.50	82.55	82.55
66754-400150	101.60	38.10	98.55	88.90
66754-400200	101.60	50.80	98.55	101.60
66754-400250	101.60	63.50	98.55	95.25
66754-400300	101.60	76.20	98.55	95.25
66754-600150	152.40	38.10	127.00	114.30
66754-600200	152.40	50.80	127.00	127.00
66754-600250	152.40	63.50	127.00	120.65

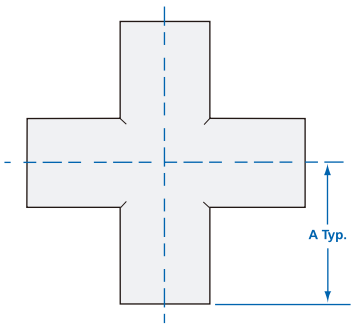

4-Way Crosses

Part Number	Dimensions, mm		
	Tube OD	Wall Thickness	A
66755-0050	12.70	1.24	19.05
66755-0075	19.05	1.65	25.40
66755-0100	25.40	1.65	47.75
66755-0150	38.10	1.65	5715
66755-0200	50.80	1.65	76.20
66755-0250	63.50	1.65	76.20
66755-0300	76.20	1.65	82.55
66755-0400	101.60	2.11	98.55
66755-0500	127.00	2.11	107.95
66755-0600	152.40	2.77	127.00
66755-0800	203.20	3.05	177.80
66755-1000	254.00	3.05	241.30

5-Way Crosses

Part Number	Dimensions, mm		
	Tube OD	Wall Thickness	A
66756-0075	19.05	1.65	25.40
66756-0100	25.40	1.65	47.75
66756-0150	38.10	1.65	57.15
66756-0200	50.80	1.65	76.20
66756-0250	63.50	1.65	76.20
66756-0300	76.20	1.65	82.55
66756-0400	101.60	2.11	98.55
66756-0500	127.00	2.11	107.95
66756-0600	152.40	2.77	127.00

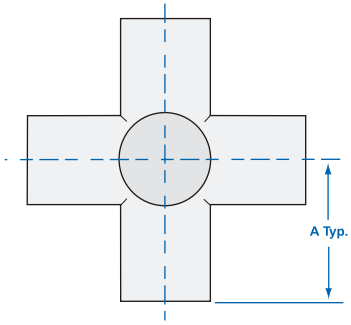

6-Way Crosses

Part Number	Dimensions, mm		
	Tube OD	Wall Thickness	A
66757-0075	19.05	1.65	25.40
66757-0100	25.40	1.65	47.75
66757-0150	38.10	1.65	57.15
66757-0200	50.80	1.65	76.20
66757-0250	63.50	1.65	76.20
66757-0300	76.20	1.65	82.55
66757-0400	101.60	2.11	98.55
66757-0500	127.00	2.11	107.95
66757-0600	152.40	2.77	127.00

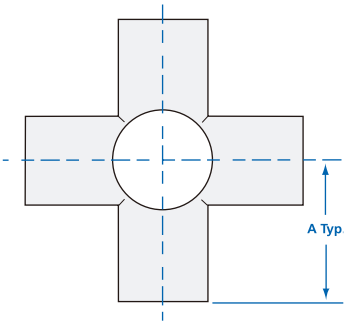

Reducer Crosses

Part Number	Dimensions, mm			
	Tube 1 & 2 Arm OD	Tube 3 & 4 Leg OD	A	B
66758-100050	25.40	12.70	47.75	25.40
66758-100075	25.40	19.05	47.75	28.45
66758-150050	38.10	12.70	57.15	31.75
66758-150075	38.10	19.05	57.15	35.05
66758-150100	38.10	25.40	57.15	54.10
66758-200050	50.80	12.70	76.20	38.10
66758-200075	50.80	19.05	76.20	41.40
66758-200100	50.80	25.40	76.20	63.50
66758-200150	50.80	38.10	76.20	69.85
66758-250150	63.50	38.10	76.20	82.55
66758-250200	63.50	50.80	82 55	76.20
66758-300150	76.20	38.10	82.55	88.90
66758-300200	76.20	50.80	82.55	82.55
66758-300250	76.20	63.50	98.55	88.90
66758-400150	101.60	38.10	98.55	101.60
66758-400200	101.60	50.80	98.55	95.25
66758-400250	101.60	63.50	98.55	95.25
66758-400300	101.60	76.20	127.00	114.30
66758-600150	152.40	38.10	127.00	127.00
66758-600200	152.40	50.80	127.00	120.65
66758-600250	152.40	63.50	127.00	120.65

Other reducer combinations can be supplied upon request

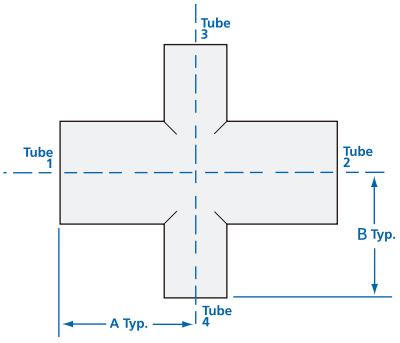

Tube Ordering Information
管道订购信息

S40	—	66759	—	4	—	6	—	F4

材质	
W40	SUS316L焊管
W10	SUS304焊管
S40	SUS316L无缝管
S10	SUS304 无缝管
S40V	SUS316L VAR无缝管
S40W	VIM+VAR无缝管

产品系列	
66759	英制
66763-05	A制5S
66763-10	A制10S
66764	公制

尺寸	
4	1/4"
6	3/8"
8	1/2"
12	3/4"
16	1"
20	1 1/4"
24	1 1/2"
32	2"
40	2 1/2"
48	3"
64	4"
80	5"
96	6"
XXXA	A制管
XXXM	公制管

长度	
2	2000mm
4	4000mm
6	6000mm

表面处理	
BLANK	BA Ra≤0.8um
F4	EP Ra≤0.375um
F5	MP Ra≤0.8um
F6	AP Ra≤2.50um

说明

型号说明仅用于说明型号组成规则，有些组合实际并不存在；
如有疑问请联系迈格诺科销售代表。

Tube Series
英制规格管道系列

Material	316L/304
Surface treatment	EP/BA/AP
Range of size	1/8″ -12″
Comply with specification	ASTM A269.A632

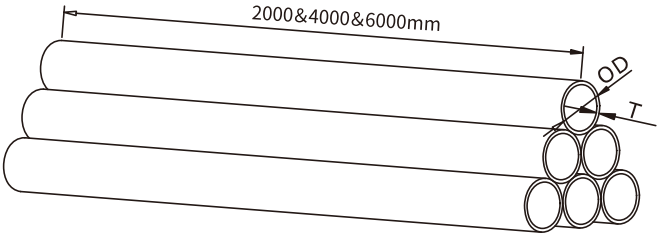

Tube size		Wall Thickness (mm)	316L/304L BA/AP 316L EP		Length
Inch size	Outside Diameter (mm)		Seamless	Seam	
1/4″	6.35	0.89/1.0	√		2000/4000/6000
3/8″	9.53	0.89/1.0	√		
1/2″	12.7	1.0/1.24	√		
5/8″	15.88	1.24	√		
3/4″	19.05	1.24/1.65	√		
1″	25.4	1.65	√	√	
1-1/2″	38.1	1.65	√	√	
2″	50.8	1.65	√	√	
2-1/2″	63.5	1.65	√	√	
3″	76.2	1.65	√	√	
4″	101.6	2.11	√	√	
5″	127	2.77	√	√	
6″	152.4	2.77	√	√	
8″	203.20	3.05	√	√	
10″	254.00	3.05	√	√	
12″	304.80	3.05	√	√	

Pipe Series
A制规格管道系列

Material	316L/304
Surface treatment	EP/BA/AP
Range of size	15A-1000A
Comply with specification	JIS G3459, JIS G3468

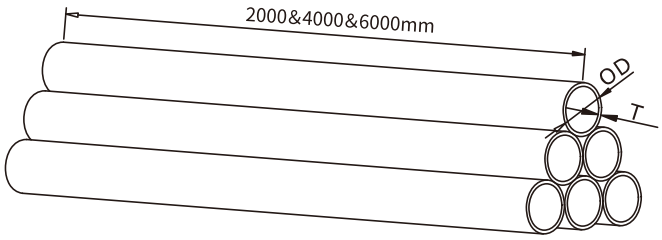

Pipe size		Wall Thickness (mm)		316L/304L BA/AP 316L EP		Length
A size	Outside Diameter (mm)	5S	10S	Seamless	Seam	
15A	21.7	1.65	2.1	√	√	2000/4000/6000
20A	27.2	1.65	2.1	√	√	
25A	34.0	1.65	2.8	√	√	
32A	42.7	1.65	2.8	√	√	
40A	48.6	1.65	2.8	√	√	
504	60.5	1.65	2.8	√	√	
65A	76.3	2.1	3.0		√	
80A	89.1	2.1	3.0		√	
90A	101.6	2.1	3.0		√	
100A	114.3	2.1	3.0		√	
125A	139.8	2.8	3.4		√	
150A	165.2	2.8	3.4		√	
200A	216.3	2.8	4.0		√	
250A	267.4	3.4	4.0		√	
300A	318.5	4.0	4.5		√	
350A	355.6	4.0	5.0		√	
400A	408.4	4.5	5.0		√	
450A	457.2	4.5	5.0		√	
500A	508.0	5.0	5.5		√	
550A	558.8	5.0	5.5		√	
600A	609.6	5.5	6.5		√	
650A	680.4	—	8.0		√	
700A	711.2	—	8.0		√	
750A	762.0	—	8.0		√	
800A	812.8	—	8.0		√	
850A	863.6	—	8.0		√	
900A	914.4	—	8.0		√	
950A	965.2	—	8.0		√	
1000A	1016	—	9.5		√	

4 Heater Jackets

4.1 Heater Jackets.....132-134

Heater Jackets

Specifications

Materials

Heaterjacket: Reinforced silicone rubber fabric
Insulator: ¼ or ½ inch thick closed-cell siicone rubber foam
Fasteners: ½ inch diameter metal snaps with nylon cover standard

Electrical

Watt density: 1 to 2 inch diameter: 1.5 W/in ;
3 to 4 inch diameter: 1.25 W/in

Voltage: 120V or 208V standard,other voltages available
Power leads: 4inch long #18 AWG,UL 1180/CSA 10A rated
Connectors: Positive locking Mate-N-Lok
Temperature range:≤200°C

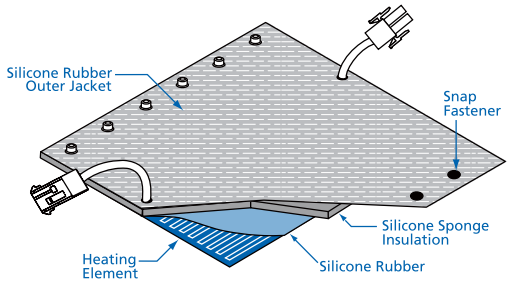

Features

- Even heating up to 200°C
- High temperature cloth heaters for heating up to 450°C
- High temperature cloth heaters for heating up to 450°C
- Heaters are interconnect able up to a 10A circuit
- Integrates with standard controllers
- Built-in insulation with insulated lead wires
- UL recognized construction
- One year warranty
- Easy on/off with reclosable fasteners
- Trimable, tight contact fit
- ¼ or ½ inch thick dosed cell silicone rubber
- ¼ to 2 inch fiberglass based insulation for cloth heaters
- 120V or 208V standard,208V available at no charge, replace "-3" with "-2" in model number, other voltages are also available

Benefits

- Reduced svstem downtime
- Improved heat transfer minimizing cold spots
- Clean room compatible
- Combine standard parts to cover custom lines
- Adjustable temperatures
- Modular heating system

Internal/External Temperature Comparison

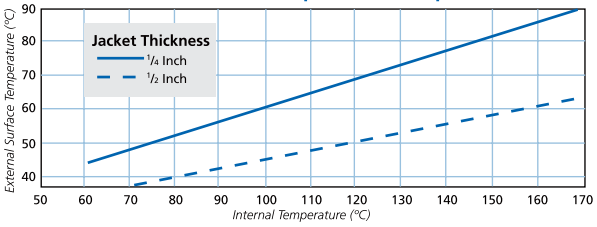

Heater Jackets Ordering Information

加热套订购信息

66231 – 0200 0100 – RT

产品系列	
66231	真空加热套

尺寸A		尺寸B	
0100	1"	0100	1"
0150	1 1/2"	0150	1 1/2"
0200	2"	0200	2"
0250	2 1/2"	0250	2 1/2"
0300	1"	0300	1"
0400	3"	0400	3"
0500	5"	0500	5"
0600	6"	0600	6"

产品类型	
TB	管道
FG	法兰
EB	90°弯头
HEB	45°弯头
ET	等径三通
RT	变径三通
RC	锥形变径

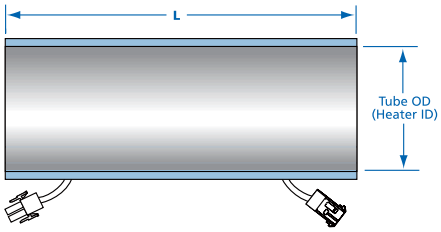

1/2" Thick Heater Jackets - Tube OD	
Flange Size	**Length**
1.5"(38.1)	OPTION
2"(50.8)	OPTION
2.5"(63.2)	OPTION
3"(76.2)	OPTION
4"(101.6)	OPTION

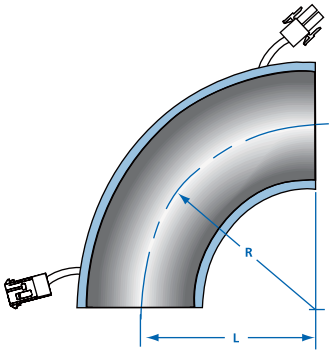

90°Radius Elbow

Tube OD	Langth L	Radius R
1½	2.00	2.25
2	2.75	3.00
3	4.00	4.50
4	5.50	6.00

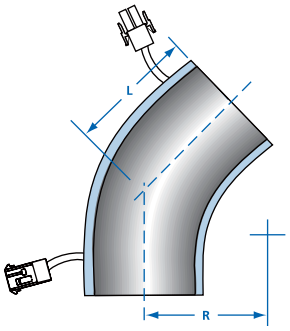

45°Radius Elbow

Tube OD	Langth L	Radius R
1½	0.69	2.25
2	1.00	3.00
3	1.37	4.50
4	2.00	6.00

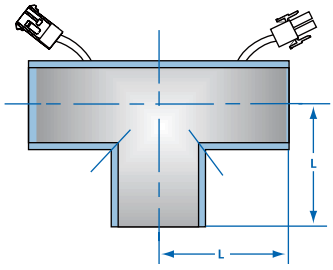



Tee Heater Jackets

Flange Type	Tube OD	Langth L
NW-25	1½	2
NW-40	2	2¾
NW-50	3	3
IS0-80	3	3
IS0-100	3	3

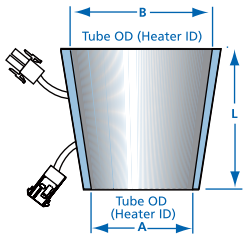

Conical Heater Jackets

Thickness	A	B	Langth L
¼	1½	2	1 ⅜
¼	2	3	2 7/16
¼	2	4	2 ⅝
¼	3	4	2 ⅝

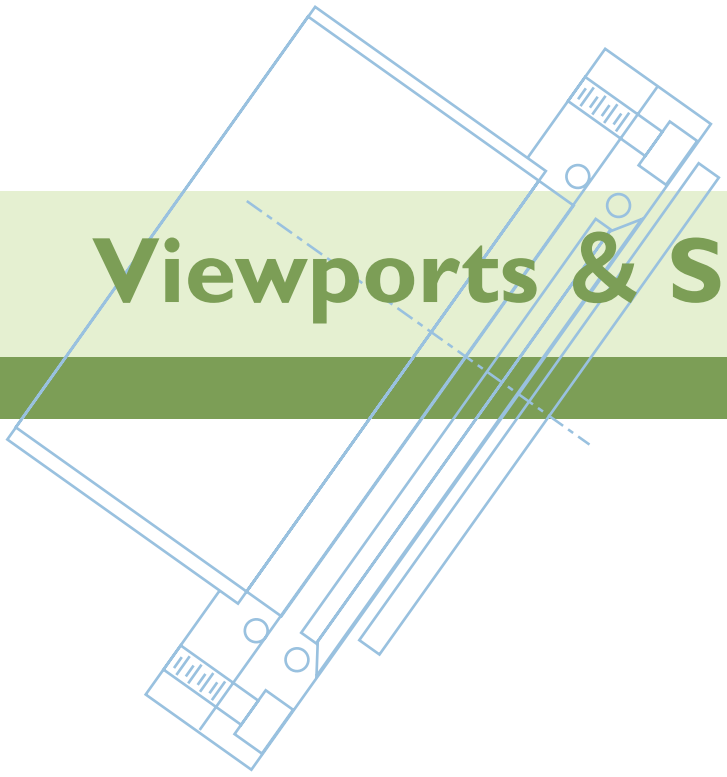

Viewports & Shutters 5

5.1 Zero Length Viewport 135-138

5.2 Demountable Viewport 139-140

5.3 Quick Access Doors 141

5.4 Glass Adapters 142

5.5 Viewport Stubs 142

MAGNOX Products offers a complete line of viewports for vacuum chambers with NW,ISO and CF langes. CF flanged viewports are available with fully annealed 7056 glass or fused silica Weld stub viewports are available for welding onto new or existing chamers.Specal materials and coatings, such as sapphire and anti-reflective (AR)coating, are available on request Glass provides a large distortion free viewing area at low cost. Quartz and fused silica provide superior ultraviolet radiation transmission and resistance to thermal shock.

MAGNOX manufactures glass adapters in 7740 Pyrex and 7052 glass. These adapters are useful for mounting glass accessories to metal high vacuum systems, or to attach flange mounted components to glass systems, Glass adapters are available with NW. CF. and ISO flanges as standards.

Vacuum Viewport Ordering Information
真空视窗订购信息

66249 – **0275** – **FS**

产品系列	
66249	钎焊视窗

代码	规格说明
0133	CF16
0075	KF16
0212	CF25
0100	KF25
0275	CF35
0150	KF40
0338	CF50
0200	KF50
0450	CF63
0250K	ISO63-K
0462	CF80
0300K	ISO80-K
0600	CF100
0400K	ISO100-K
0600K	ISO160-K
0800	CF160

产品类型	
HB	高硼硅
FQ	熔融石英
FS	蓝宝石
CQ	水晶石英
MF	氟化镁
US	紫外蓝宝石
ZS	硒化锌

说明

1. 型号说明仅用于说明型号组成规则，有些组合实际并不存在；如有疑问请联系迈格诺科销售代表。



Magnesium Fluoride Transmission Spectrum

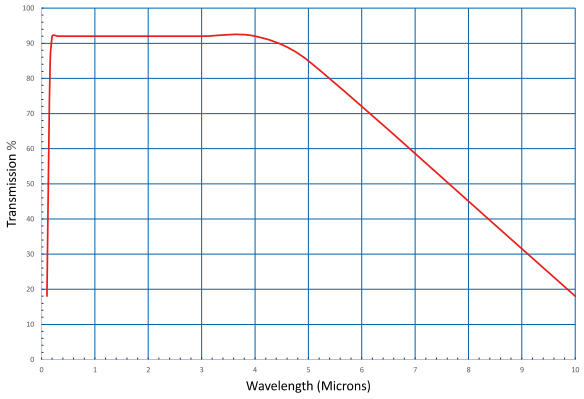

DUV Sapphire Transmission Spectrum

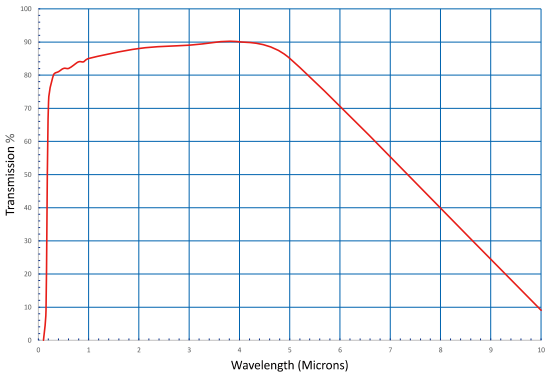

Borosilicate Transmission Spectrum

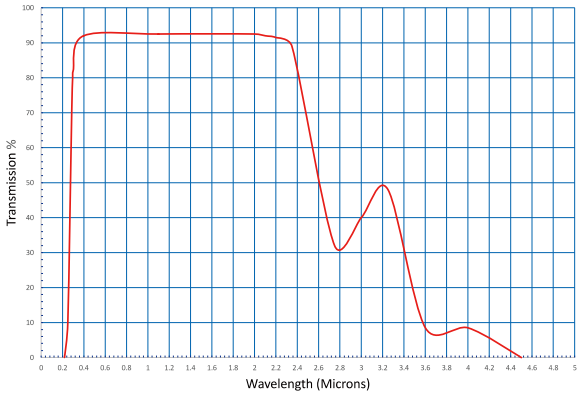

Crystal Quartz Transmission Spectrum

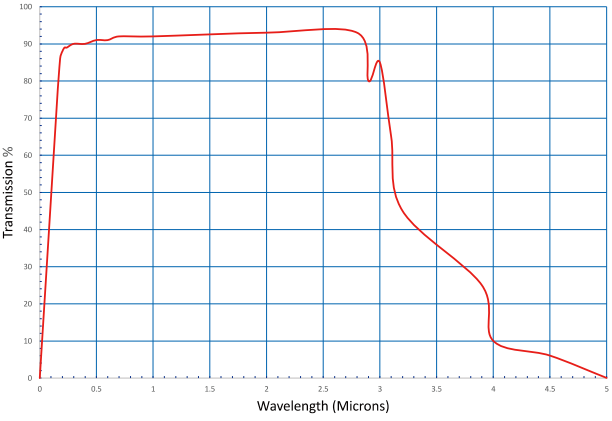

Zinc Selenide Transmission Spectrum

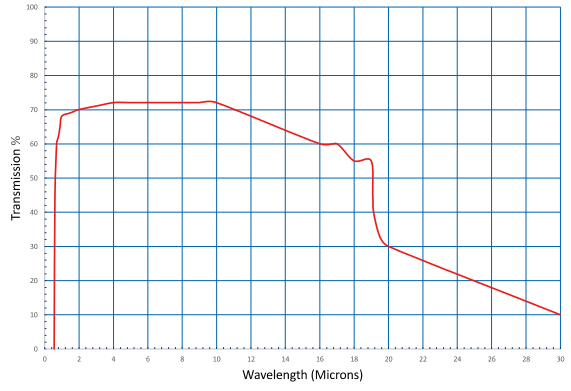

UV Sapphire Transmission Spectrum

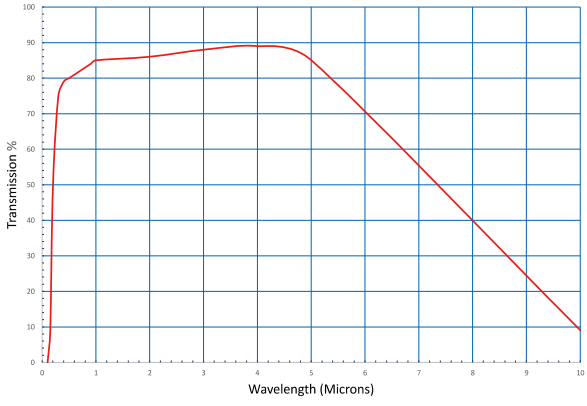

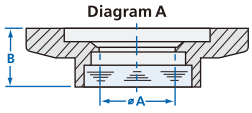

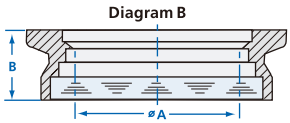

NW Viewports

Part Number	Diagram	Flange Size	Dimensions, mm	
			View ø A	B
66249-0075	A	NW-16	15.75	9.78
66249-0100	A	NW-25	15.75	9.78
66249-0150	B	NW-40	38.35	14.07
66249-0200	B	NW-50	38.35	14.07

注：因工艺所致，不同材质的视镜尺寸会有差异，具体数据请咨询迈格诺科销售工程师。

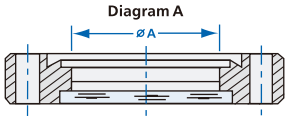

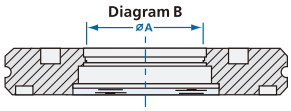

ISO&CF Zero Length Viewports

Part Number	Diagram	Flange Type	Dimensions, mm
			View Ø A
66249-0133	A	CF16	16.00
66249-0212	A	CF25	16.00
66249-0275	A	CF35	37.85
66249-0338	A	CF50	37.85
66249-0450	A	CF63	67.56
66249-0462	A	CF80	67.56
66249-0600	A	CF100	100.84
66249-0675	A	CF130	100.84
66249-0800	A	CF160	142.24
66249-1000	A	CF200	142.24
66249-0250K	B	ISO63	37.85
66249-0300K	B	ISO80	37.85
66249-0400K	B	ISO100	67.56
66249-0600K	B	ISO160	100.84
66249-0800K	B	ISO200	142.24

注：因工艺所致，不同材质的视镜尺寸会有差异，具体数据请咨询迈格诺科销售工程师。

Demountable Viewport Ordering Information
可拆卸视窗订购信息

66257	—	0275	—	FQ

型号	
66250	组合视窗

尺寸规格	
0133	CF16
0075	KF16
0212	CF25
0100	KF25
0275	CF35
0150	KF40
0338	CF50
0200	KF50
0250K	ISO63-K
0250N	NW63
0462	CF80
0300K	ISO80-K
0300N	NW80
0600	CF100
0400K	ISO100-K
0400N	NW100
0675	CF130
0600K	ISO160-K
0600N	NW160
0800	CF160
0800K	ISO200-K
0800N	NW200
1000	CF200
1000K	ISO250-K
1000N	NW250

视镜材质	
FQ	石英
FS	蓝宝石
UQ1	紫外石英增透膜245-400nm
UQ2	紫外石英增透膜350-700nm
UQ3	紫外石英增透膜650-1050nm
UQ4	紫外石英增透膜1050-1700nm

说明
1、型号说明仅用于说明型号组成规则，有些组合实际并不存在；如有疑问请联系迈格诺科销售代表。

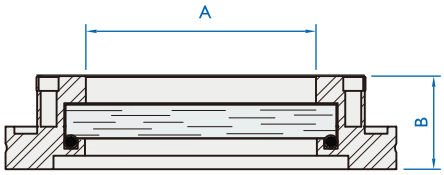

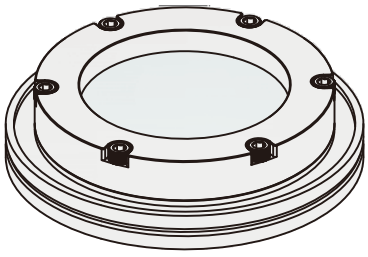

ISO-K Flange Demountable Viewports			
Model Number	Flange SIze	Dimensions, mm	
		A	B
66250-0250K	ISO63	60.2	73.15
66250-0300K	ISO80	97.28	73.15
66250-0400K	ISO100	148.08	73.15

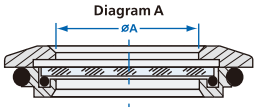

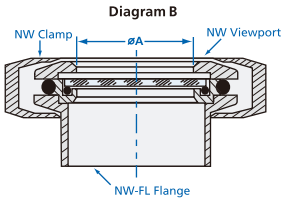

NW Zero Length Viewports

Model Number	Dimensions, mm			
	Diagram	Flange Type	View Materials	View Ø A
66250-0150A	A	NW-40	Fused quartz	32.00
66250-0200A	A	NW-50	Fused quartz	41.40
66250-0150B	B	NW-40	Fused quartz	32.00
66250-0200B	B	NW-50	Fused quartz	41.40

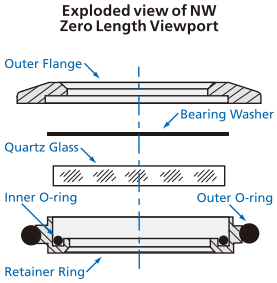

Weld stub viewports are provided with a tube for welding onto an existing chamber.

Viewport Weld Stubs

Part Number	Flange OD	Dimensions, mm		
		View Ø A	B	C
66254-0250	113.54	60.2	73.15	63.50
66254-0400	151.64	97.28	73.15	101.60
66254-0600	202.44	148.08	73.15	152.40

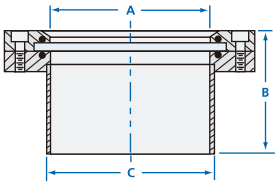

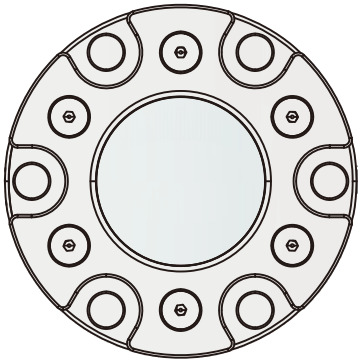

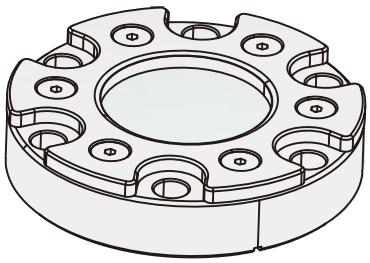



CF Zero Length Viewports

Part Number	Flange Size	Dimensions, mm	
		View Diameter	Galass Thickness
66250-0133	CF16	14.22	4.00
66250-0275	CF40	30.23	4.00

Vacuum Quick Access Dorrs
真空快开门

An Add-A-Door can provide easy access to a vacuum system when elastomer seals are acceptable. The hinged, FKM sealed door is quickly bolted to an existing CF (Conflat style) flanged chamber port. The door is opened easily by turning a knurled knob. These doors are available for 2¾ to 10 inch (70 to 254mm) OD flanges with a solid metal door or with a iewport. The standard finish is electropolish. Custom sizes can be supplied upon request.

Technical Data for Quick Access Doors

Door Seal	FKM
Mounting Seal	OFHC gasket
Operate Pressure Range	1.000 mbar-1.33x10-8 mbar
Leak Rate	1.33x10-9 mbar Vs, He
Temperature Range	-20°C (-4°F) ~ 150°C (302°F)
Bake Temperature	100°C (212°F)
Body Material	SS304L
Hinge Material	Optional high - grade SS316L material
Viewport Material	Glass (only with viewport version)
Mounting Position	Any

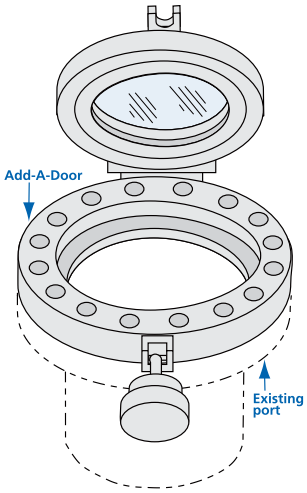

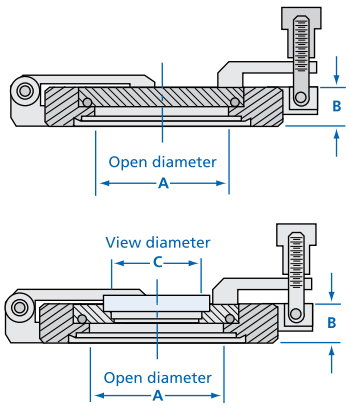

Quick Access Dorrs With Blank Flanges

Part Number	Dimensions, mm		
	Flange Type	A	B
66255-0275	CF40	35.05	12.70
66255-0450	CF63	61.85	17.45
66255-0600	CF100	99.49	19.84
66255-0800	CF160	149.23	22.23
66255-1000	CF200	200.03	24.59

Quick Access Dorrs With Viewport

Part Number	Dimensions, mm			
	Flange Type	A	B	C
66256-0450	CF63	61.85	17.45	37.85
66256-0600	CF100	99.49	25.40	67.31
66256-0800	CF160	149.23	30.48	98.55
66256-1000	CF200	200.03	33.02	142.24

注：可提供高硼硅和熔融石英两种材质的视镜。
需要高硼硅材质，物料号后加-HB；需要熔融石英材质在物料号后加-FQ。

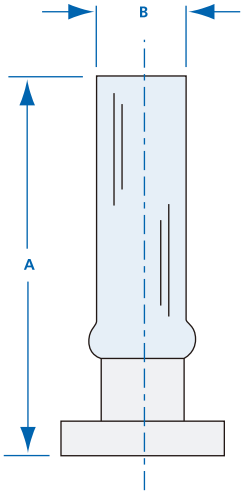

NW, ISO & CF Glass Adapters

Part Number	Dimensions, mm	
	Flange Size	A
66246-0050	NW-10	124.46
66246-0075	NW-16	124.46
66246-0100	NW-25	124.46
66246-0150	NW-40	124.46
66246-0200	NW-50	137.16
66246-0250K	ISO-63	139.70
66246-0300K	ISO-80	165.10
66246-0400K	ISO-100	260.35
66246-0600K	ISO-160	276.35
66246-0133	CF16	137.92
66246-0212	CF25	137.67
66246-0275	CF40	138.68
66246-0338	CF50	151.89
66246-0450	CF63	19710
66246-0462	CF80	194.56
66246-0600	CF100	265.18
66246-0675	CF130	278.38
66246-0800	CF160	279.40

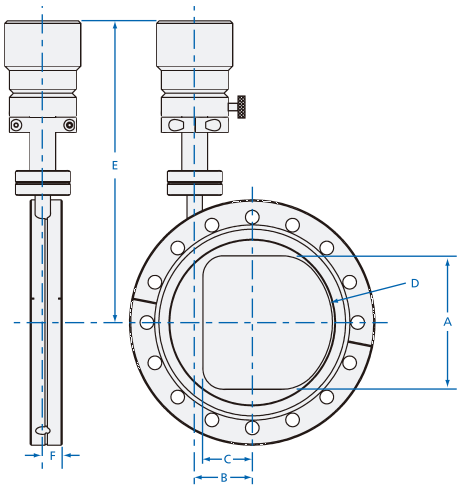

Viewport Stubs

Part Number	Flange Size	Dimensions, mm					
		A	B	C	D	E	F
66248-0275	CF40	28.45	14.48	10.67	17.78	152.15	11.18
66248-0450	CF63	50.80	21.59	16.51	29.97	175.77	8.64
66248-0400	CF100	82.55	35.56	30.48	48.26	186.44	11.94
66248-0600	CF160	127.00	52.32	44.45	73.66	215.65	12.70



Liquid & Ceramic Breaks Feedthroughs

6

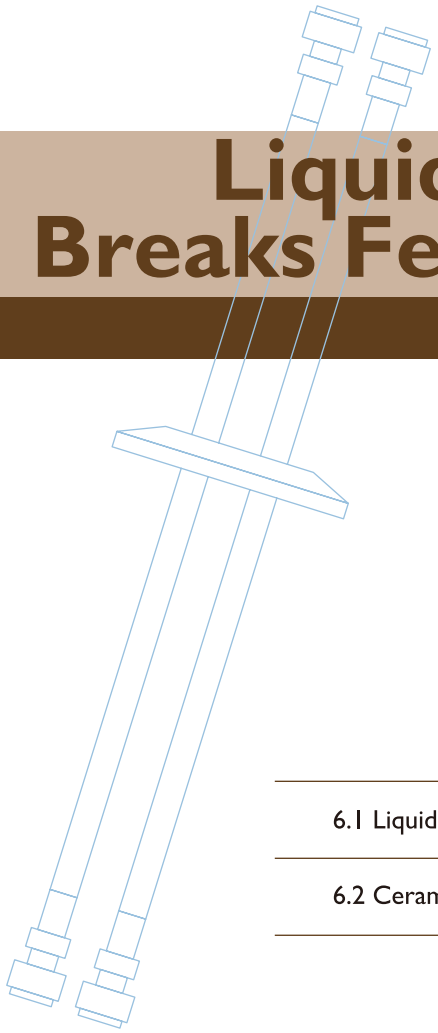

6.1 Liquid Feedthroughs 144-146

6.2 Ceramic Breaks 147-150

Liquid & Ceramic Breaks Feedthroughs

MAGNOX Products' line of liquid and liquid nitrogen feedthroughs includes the most commonly required for medium, high and ultra-high vacuum applications. Tubing is .25 and .375 (6.35 and 9.53mm) inch OD, 304 stainless steel with CF or NW flanges. They are available without fittings or terminated with industry standard Swagelok or Cajon VCR fittings. Maximum bakeout with CF flanges is 450°C and 200°C with NWs. Vacuum ranges are 10^{-10} mbar and 10^{-8}, respectively.

Liquid feedthroughs are a cost-effective and reliable way to introduce water into a vacuum system. The .035 inch (.89mm) single wall tube construction is designed for the transport of water as a cooling agent. Liquid nitrogen feedthroughs are constructed with single and dual coaxial tube geometries. This thermal barrier effectively reduces condensation and ice buildup on the atmosphere side of the feedthrough around the mounting flange interface, protecting the seal's integrity. This is necessary because of the extreme thermal gradients encountered with liquid nitrogen.

Liquid Feedthroughs Ordering Information
气液接头订购信息

66801	–	0275	–	LN	–	D	–	4	VM	SW	–	10
型号		法兰尺寸		安装类型		馈通管数量		接口尺寸	真空侧端口	大气测端口		材质

型号	
66801	气液接头

法兰尺寸	
0133	CF16
0075	KF16
0212	CF25
0100	KF25
0275	CF35
0150	KF40

安装类型	
LF	法兰
LN	液氮

馈通管数量	
S	1
D	2

接口尺寸	
2	1/8"
4	1/4"
6	3/8"

真空侧端口	
TW	TUBE
SW	LOK
VM	Male VCR
VF	Fmale VCR
OF	Fmale VCO
OM	Male VCO
QF	Quick Fittings
NM	Male NPT
NF	Fmale NPT
PM	Male PT
PF	Fmale PT
GM	G螺纹外丝
GF	G螺纹内丝

大气测端口	
TW	TUBE
SW	LOK
VM	Male VCR
VF	Fmale VCR
OF	Fmale VCO
OM	Male VCO
QF	Quick Fittings
NM	Male NPT
NF	Fmale NPT
PM	Male PT
PF	Fmale PT
GM	G螺纹外丝
GF	G螺纹内丝

材质	
10	SUS304
40	SUS316L

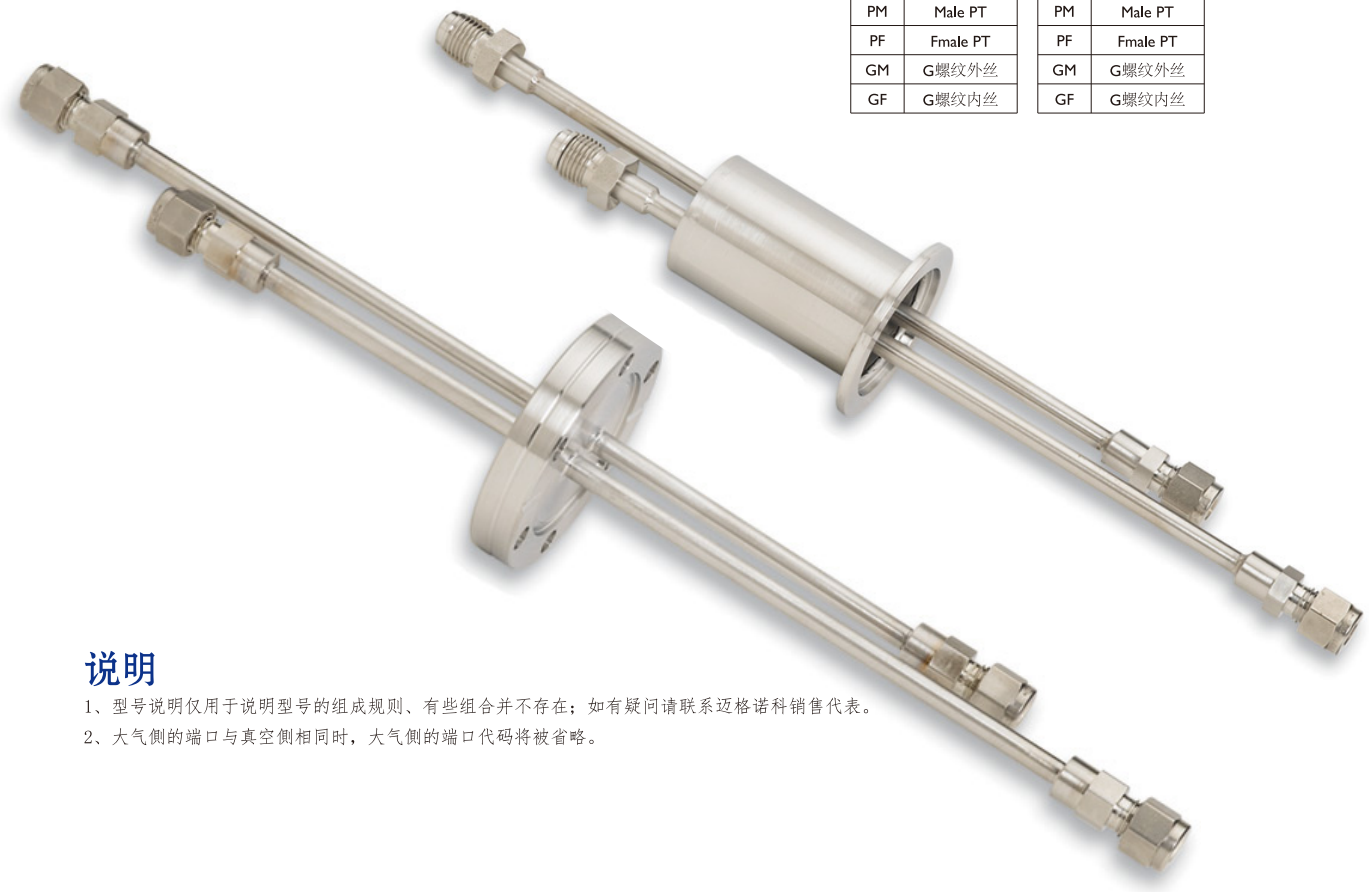

说明

1、型号说明仅用于说明型号的组成规则、有些组合并不存在；如有疑问请联系迈格诺科销售代表。

2、大气侧的端口与真空侧相同时，大气侧的端口代码将被省略。

Single Liquid Feedthroughs

Flange Size	Tube Fittings	Tube OD	Dimensions, mm	
			A	B
NW-16	None	6.35	76.20	101.60
NW-25	None	6.35	76.20	101.60
NW-25	2 Swagelok	6.35	101.85	127.25
NW-25	2 MVCR	6.35	102.36	127.76
NW-40	None	6.35	76.20	101.60
NW-40	2 Swagelok	6.35	101.85	127.25
NW-40	2 MVCR	6.35	102.35	127.76
NW-40	None	9.53	76.20	101.60
NW-50	None	6.35	76.20	101.60
NW-50	2 Swagelok	6.35	101.85	127.25
NW-50	2 MVCR	6.35	102.36	127.76
NW-50	None	9.53	76.20	101.60
CF 16	None	6.35	76.20	101.60
CF 40	None	9.53	76.20	101.60
CF 40	None	6.35	76.20	101.60
CF 40	2 Swagelok	6.35	101.85	127.25
CF 40	2MVCR	6.35	102.36	127.76
CF 40	None	9.53	76.20	101.60

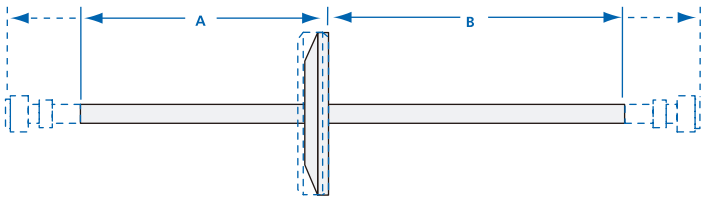

Dual Liquid Feedthroughs

Flange Size	Tube Fittings	Tube OD	Dimensions, mm	
			A	B
NW-40	None	6.35	76.20	101.60
NW-40	4 Swagelok	6.35	101.85	127.25
NW-40	4 MVCR	6.35	102.36	127.76
NW-50	None	6.35	76.20	101.60
NW-50	4 Swagelok	6.35	101.85	127.25
NW-50	4 MVCR	6.35	102.35	127.76
CF 40	None	6.35	76.20	101.60
CF 40	4 Swagelok	6.35	101.85	127.25
CF 40	4 MVCR	6.35	102.36	127.76
CF 40	None	9.53	76.20	101.60

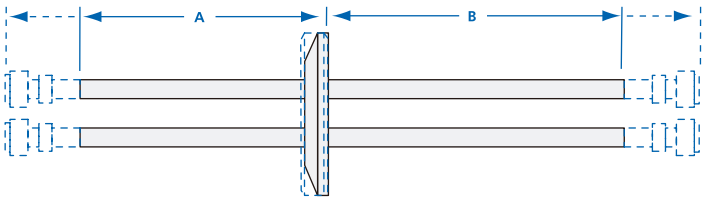

Single Liquid Nitrogen Feedthroughs

Flange Size	Tube Fittings	Tube OD	Dimensions, mm	
			A	B
NW-16	None	6.35	139.70	114.30
NW-25	None	6.35	133.70	114.30
NW-25	2 Swagelok	6.35	165.35	139.95
NW-25	2 MVCR	6.35	165.86	140.46
NW-40	None	6.35	139.70	114.20
NW-40	2 Swagelok	6.35	165.35	139.95
NW-40	2 MVCR	6.35	165.86	140.46
NW-40	None	9.53	139.70	114.30
NW-50	None	6.35	133.70	114.30
NW-50	2 Swagelok	6.35	105.35	139.95
NW-50	2 MVCR	6.35	165.86	140.46
NW-50	None	9.53	139.70	114.30
CF 16	None	6.35	139.70	114.30
CF 40	None	9.53	133.70	114.30
CF 40	None	6.35	139.70	114.30
CF 40	2 Swagelok	6.35	165.35	139.95
CF 40	2MVCR	6.35	165.86	140.46
CF 40	None	9.53	139.70	114.30

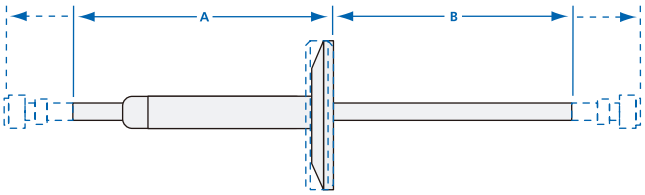

Dual Liquid Nitrogen Feedthroughs

Flange Size	Tube Fittings	Tube OD	Dimensions, mm			
			A	B	C	D
NW-40	None	6.35	165.10	88.90	139.70	114.30
NW-40	4 Swagelok	6.35	190.75	114.55	165.35	139.95
NW-40	4 MVCR	6.35	191.26	115.06	165.86	140.46
NW-50	None	6.35	165.10	88.90	139.70	114.30
NW-50	4 Swagelok	6.35	190.75	114.55	165.35	139.95
NW-50	4 MVCR	6.35	191.26	115.06	165.86	140.46
CF 40	None	6.35	165.10	88.90	139.70	114.30
CF 40	4 Swagelok	6.35	190.75	114.55	165.35	139.95
CF 40	4 MVCR	6.35	191.26	115.06	165.86	140.46
CF 40	None	9.53	165.10	88.90	139.70	114.30

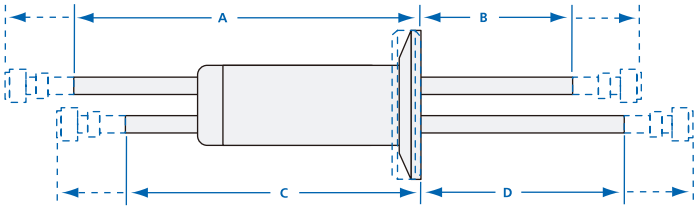

Ceramic Breaks-Water

Insulate electrical lines in applications with non-cryogenic coolant lines
Designed for high vacuum and UHV applications
Constructed with vacuum-grade materials, including OFHC® copper weldable lips, high-purity alumina ceramic insulation, and vacuum tube-grade braze alloys
OFHC copper weldable lips can be welded or brazed to copper or stainless steel cooling lines
Available in 1/4", 3/8", and 1/2" tube sizes

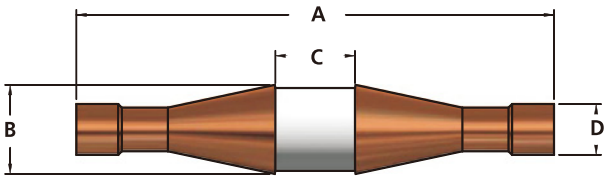

Part Number	Braze Lip Material	Voltage	Tube Socket (in.)	Dimensions, (in.)			
				A	B	C	D
66903-0321CFT05W	Copper	5kV	1/4	3	0.59	0.50	0.32
66903-0441CFT05W	Copper	5kV	3/8	3	0.59	0.50	0.44
66903-0591CFT05W	Copper	5kV	1/2	3	0.74	0.50	0.59

Ceramic Breaks-Cryogenic

Provide electrical insulation in applications with liquid nitrogen
Rated for high vacuum and UHV applications
Constructed with vacuum-grade materials, including 304 stainless steel weldable lips, high-purity alumina ceramic insulation and vacuum tube-grade braze alloys
A flexible seal design and the use of an expansion alloy that has a low thermal coeficient of expansion enables for operation at cryogenic temperatures to -200° C
Available in 1/8", 1/4", and 3/8" tube sizes

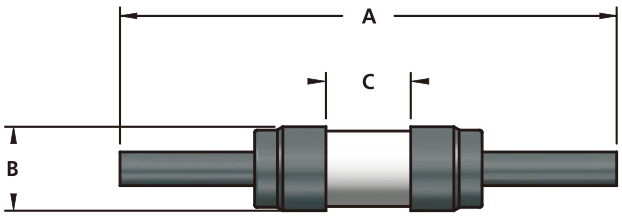

Part Number	Voltage	Weld Lip Material	Ends	Dimensions, (in.)		
				A	B	C
66904-0121CFT03C	3kV	Stainless Steel	1/" Tube End.	1.80	0.312	0.30
66904-0251CFT06C	6kV	Stainless Steel	1/4" Tube End	3.00	0.54	0.67
66904-0311CFT06C	6kV	Stainless Steel	1/4" Socket Weld	3.00	0.54	0.67
66904-0371CFT06C	6kV	Stainless Steel	3/8" Tube End	3.00	0.79	0.67
66904-0251CFT13C	13kV	Stainless Steel	1/4" Tube End	3.00	0.57	0.67
66904-0441CFT13C	13kV	Stainless Steel	3/8" Socket Weld	3.00	0.79	0.52

Ceramic Breaks Vacuum

A ceramic fitting designed to insulate both ends.

Available for 5kV to 20kV DC, with a ceramic inner diameter ranging from a minimum of ϕ 11.00 to a maximum of ϕ 28.00. Choose the most suitable item from our extensive lineup.

In addition to standard types, we also offer standardized insulated flanges with welded bellows for vibration absorption and alignment adjustment.

For connection fittings, select the optimal specification and size from Tube End, Bite End, Swagelok®, VCR® Female, VCR® Male, NW/KF, ICF, JIS-VF, or JIS-VG.

Custom orders, including modifications to fitting specifications and dimensions, are promptly accommodated.

CF Flanged

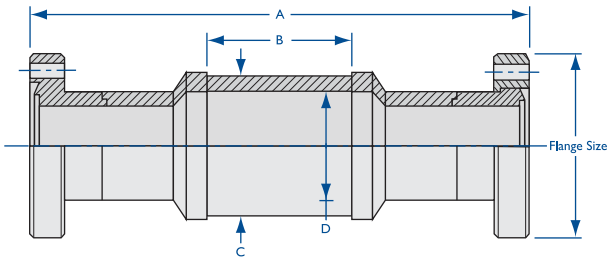

Part NO.	Flang Size	Dimensions, (mm)				电压,KV
		A	B	C	D	
66902-0133	CFI6	110 ± 10	15	19	11	15
66902-0212	CF25	110 ± 10	13	23	14	13
66902-0275	CF35	125 ± 10	20	32	20	20
66902-0338	CF50	120 ± 10	11	38	28	10

KF Flanged

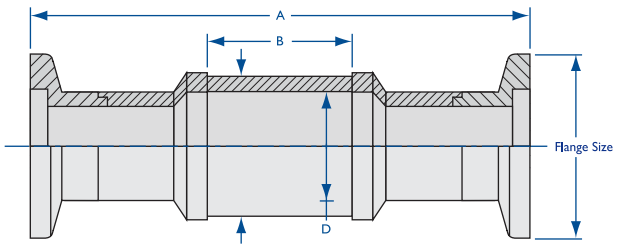

Part NO.	Flang Size	Dimensions, (mm)				电压,KV
		A	B	C	D	
66902-0075	KFI6	110 ± 10	15	19	11	15
66902-0100	KF25	110 ± 10	13	23	14	13
66902-0150	KF40	125 ± 10	20	32	20	20
66902-0200	KF50	120 ± 10	11	38	28	10

CF Flanged

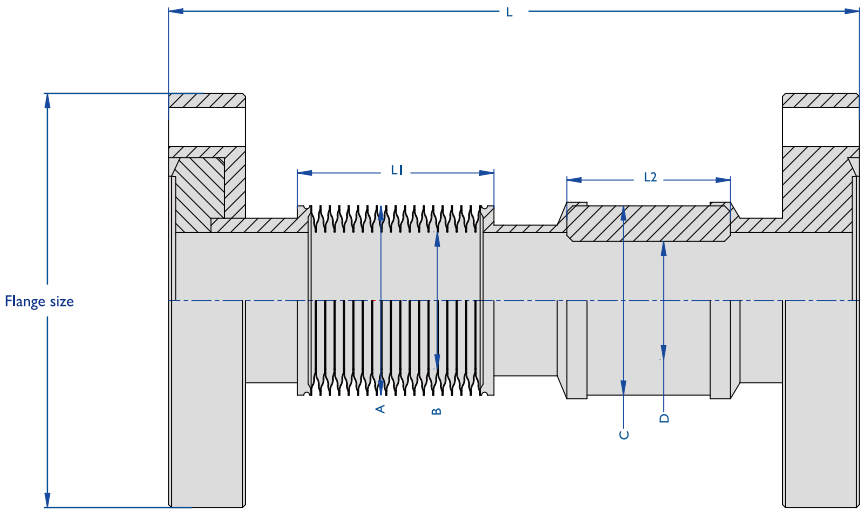

Part NO.	Flang Size	Dimensions, (mm)					L	电压,KV
		A	B	C	D	L2		
66907-0133	CFI6	17.00	10.00	18.50	11.00	15.00	Customization	15
66907-0212	CF25	23.00	13.00	23.00	14.00	13.00	Customization	13
66907-0275	CF35	30.00	20.00	32.00	20.00	20.00	Customization	20
66907-0338	CF50	38.10	24.40	38.00	28.00	11.00	Customization	10

KF Flanged

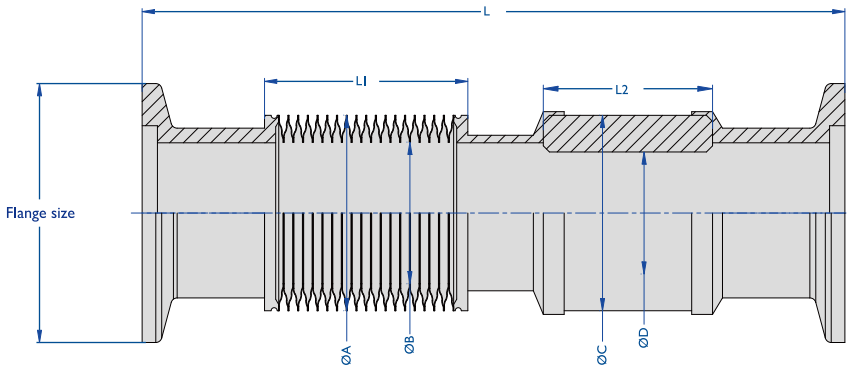

Part NO.	Flang Size	Dimensions, (mm)					L	电压,KV
		A	B	C	D	L2		
66907-0075	KFI6	17.00	10.00	18.50	11.00	15.00	Customization	15
66907-0100	KF25	23.00	13.00	23.00	14.00	13.00	Customization	13
66907-0150	KF40	30.00	20.00	32.00	20.00	20.00	Customization	20
66907-0200	KF50	38.10	24.40	38.00	28.00	11.00	Customization	10







Electrical &Instrumentation Feedthroughs

7

7.1 Electrical Feedthroughs 152-166
7.2 BNC Feedthroughs 167-168
7.3 Miniature High Voltage(MHV) 169-170
7.4 SHV-B、5、10、20 Feedthroughs 171-175
7.5 Type N Coaxial Feedthroughs 176-177
7.6 SMA Coaxial Feedthroughs 178-179
7.7 SMB Coaxial Feedthroughs 180
7.8 BNC TO Microdot Coaxial Feedthroughs 181
7.9 Multi-Pin, Circular (MPC) Feedthroughs 182-183
7.10 MPDT Sub D-Type 184
7.11 Subminiature-C Multipin 185
7.12 USB Feedthroughs 186
7.13 MS Multi-Pin 187-188
7.14 MPT Multi-Pin 189
7.15 Type C Mini Plug 190
7.16 Type C Mini Plug Plus Power 191
7.17 Type E Mini Plug 192
7.18 Type E Mini Plug Plus Power 193
7.19 Type E Push-On 194
7.20 Type J Mini Plug 195
7.21 Type J Mil-Spec Plug 196-197
7.22 Type J Mini Plug Plus Power 198
7.23 Type J Push-On 199
7.24 Type K Mini Plug Plus Power 200-201
7.25 Type K Mil-Spec Plug 202-203
7.26 Type K Push-On 204
7.27 Type R Feedthroughs 205
7.28 Type T Feedthroughs 206

Electrical Feedthroughs

MAGNOX Products' extensive line of electrical feedthroughs are manufactured from ultra-high vacuum grade materials such as high alumina ceramic insulators, OFHC copper or nickel conductors, and 304 stainless steel flanges. These robust ceramic to metal feedthroughs have electrical ratings for operation with one side in dry atmosphere while the opposite end is in a stable vacuum. They are used in UHV systems with CF flanges or high vacuum systems with NW flanges. CF feedthroughs can be baked to 450°C and NW to 200°C.

Our product line consists of the most commonly required feedthroughs for general vacuum applications. Customs designs or modified standards can readily be supplied.



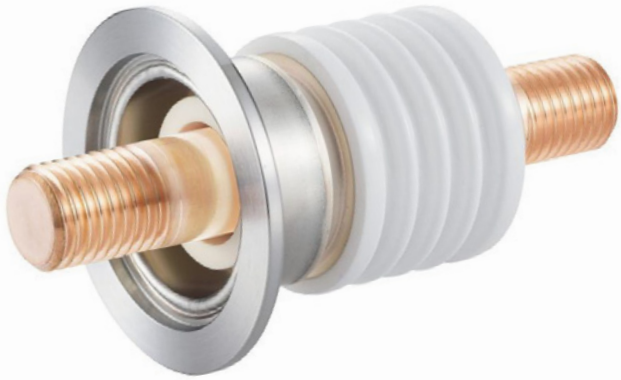

Electrical Feedthroughs Ordering Information
电极馈通订购信息

66906	—	0212	—	P	—	4	—	02	—	NI	—	0005

型号	
66906	真空电极系列

尺寸规格	
0133	CF16
0075	KF16
0212	CF25
0100	KF25
0275	CF35
0150	KF40
0338	CF50
0200	KF50
0450	CF63
0250K	ISO63-K
0250F	ISO63-F
0250N	ISO63-NW
0462	CF80
0300K	ISO80-K
0300F	ISO80-F
0300N	ISO80-NW
0600	CF100
0400K	ISO100-K
0400F	ISO100-F
0400N	ISO100-NW
0675	CF130
0600K	ISO160-K
0600F	ISO160-F
0600N	ISO160-NW
0800	CF160
0800K	ISO200-K
0800F	ISO200-F
0800N	ISO200-NW
1000	CF200
1000K	ISO250-K
1000F	ISO250-F
1000N	ISO250-NW
1200	CF250
1200K	ISO320-K
1200F	ISO320-F
1200N	ISO320-NW

电极形式	
P	Pink
T	Tube

电极规格	
2	1/8"
4	1/4"
6	3/8"
8	1/2"
12	3/4"
16	1"
XXM	公制管
MXX	公制螺牙

电极数量
01
02
03
04
05
06
07
08
09
10
11
12
13
14
15
16
17
18
19
20

电极材质	
NI	镍
KA	4J33
TU	无氧铜
10	SUS304

单芯电压（kV）	
0005	0.5
0010	1
0015	1.5
0020	2
0025	2.5
0030	3
0050	5
0100	10
0150	15
0200	20
0300	30
0350	35
0600	60

电极馈通导体载流能力对照表

电极直径（mm）	电流（A）	材质
电极-Φ1.5	3A	4J33
电极-Φ1.5	3A	TU
电极-Φ1.8	5A	4J33
电极-M3	10A	4J33
电极-M3	20A	TU
电极-M4	40A	TU
电极-M6	100A	TU
电极-M8	150A	TU
电极-M10	180A	TU
电极-M12	350A	TU
电极-M14	450A	TU
电极-M18	700A	TU
电极-M20	800A	TU

注意

本表仅供参考，切勿仅凭对照表进行最终设计。
对于关键应用，尤其是大电流和高功率应用，
务必进行详细的热力学和电学计算。

说明

1、型号说明仅用于说明型号组成规则，有些组合实际并不存在；
如有疑问请联系迈格诺科销售代表。

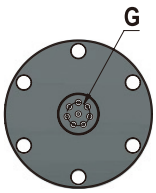

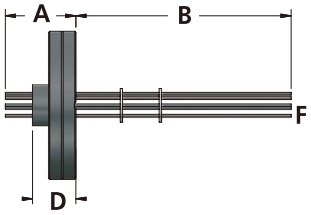

CF Flange Voltage: 1,000 Amperage: 1; 7;20

Flange Size	Pins or Tubes	#of Pins or Tubes	Conductor Material	Amps Per Pin/Tube	Dimensions, (in.)				
					A	B	D	F	G
CF16	Pin	1	Stainless Steel	1	1.80	2.20	0.80	0.05	N/A
CF16	Pin	1	Copper	20	1.80	2.20	0.80	0.05	N/A
CF40	Pin	1	Copper	20	1.80	2.20	0.80	0.05	N/A
CF16	Pin	2	Nicke	7	2.60	1.40	1.20	0.05	0.31
CF40	Pin	2	Nicke	7	2.10	1.90	0.70	0.05	0.31
CF16	Pin	2	Stainless Steel	1	2.60	1.40	1.20	0.05	0.31
CF40	Pin	2	Stainless Steel	1	2.10	1.90	0.70	0.05	0.31
CF16	Pin	2	Copper	20	2.63	1.40	1.20	0.05	0.31
CF401	Pin	2	Copper	20	2.10	1.90	0.70	0.05	0.31
CF16	Pin	4	Nicke	7	2.63	1.27	1.17	0.05	0.38
CF40	Pin	4	Nicke	7	2.13	1.87	0.67	0.05	0.38
CF16	Pin	4	Stainless Steel	1	2.63	1.27	1.17	0.05	0.38
CF40	Pin	4	Stainless Steel	1	2.13	1.87	0.67	0.05	0.38
CF16	Pin	4	Copper	20	2.63	1.27	1.17	0.05	0.38
CF40	Pin	4	Copper	20	2.13	1.87	0.67	0.05	0.38
CF16	Pin	8	Kovar	7	2.63	1.37	1.17	0.05	0.43
CF40	Pin	8	Kovar	7	2.13	1.87	0.67	0.05	0.43

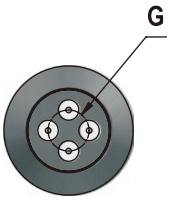

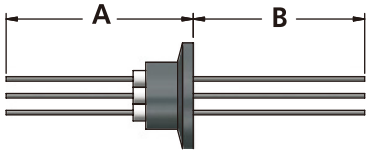

KF Flange Voltage: 1,000 Amperage: 1; 7;20

Flange Size	Pins or Tubes	#of Pins or Tubes	Conductor Material	Amps Per Pin/Tube	Dimensions, (in.)		
					A	B	G
KF25	Pin	1	Nicke	7	1.80	2.20	N/W
KF16	Pin	1	Copper	20	1.80	2.20	N/W
KF16	Pin	2	Nicke	7	2.10	1.90	0.31
KF40	Pin	2	Nicke	7	2.10	1.90	0.31
KF16	Pin	2	Stainless Steel	1	2.10	1.90	0.31
KF40	Pin	2	Stainless Steel	1	2.10	1.90	0.31
KF16	Pin	2	Copper	20	2.10	1.90	0.31
KF25	Pin	2	Copper	20	2.10	1.90	0.31
KF40	Pin	2	Copper	20	2.10	1.90	0.31
KF16	Pin	4	Nicke	7	2.13	1.87	0.38
KF25	Pin	4	Nicke	7	2.13	1.87	0.38
KF40	Pin	4	Nicke	7	2.13	1.87	0.38
KF16	Pin	4	Stainless Steel	1	2.13	1.87	0.38
KF25	Pin	4	Stainless Steel	1	2.13	1.87	0.38
KF40	Pin	4	Stainless Steel	1	2.13	1.87	0.38
KF16	Pin	4	Copper	20	2.13	1.87	0.38
KF25	Pin	4	Copper	20	2.13	1.87	0.38
KF40	Pin	4	Copper	20	2.13	1.87	0.38
KF50	Pin	4	Copper	20	2.13	1.87	0.38
KF16	Pin	8	Kovar®	7	2.13	1.87	0.43
KF25	Pin	8	Kovar	7	2.13	1.87	0.43
KF40	Pin	8	Kovar	7	2.13	1.87	0.43

CF Flange Voltage: 2,000 Amperage: 10

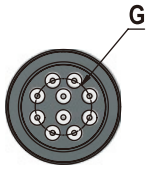

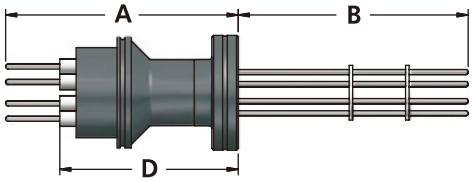

Flange Size	# of Pins	Conductor Material	Amps/Pin	Dimensions, (in.)			
				A	B	D	G
CF16	4	Alumel	10	2.30	2.70	1.81	0.38
CF40	4	Alumel	10	1.80	3.20	1.31	0.38
CF16	6	Alumel	10	2.30	2.70	1.81	0.44
CF40	6	Alumel	10	1.80	3.20	1.31	0.44
CF16	10	Alumel	10	2.55	2.70	1.93	0.51
CF40	10	Alumel	10	2.05	3.20	1.43	0.51

KF Flange Voltage: 2,000 Amperage: 10

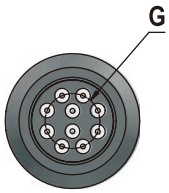

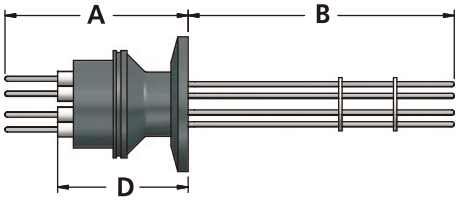

Flange Size	# of Pins	Material	Amps/Pin	Dimensions, (in.)			
				A	B	D	G
KF16	4	Alumel®	10	2.30	2.70	1.31	0.38
KF40	4	Alumel	10	1.80	3.20	1.31	0.38
KF16	6	Alumel	10	2.30	2.70	1.31	0.44
KF25	6	Alumel	10	1.80	3.20	1.31	0.44
KF40	6	Alumel	10	2.55	2.70	1.31	0.44
KF16	10	Alumel	10	2.05	3.20	1.43	0.51
KF25	10	Alumel	10	2.05	3.20	1.43	0.51
KF40	10	Alumel	10	2.05	3.20	1.43	0.51

CF Flange Voltage: 3,000 Amperage: 125; 250; 600

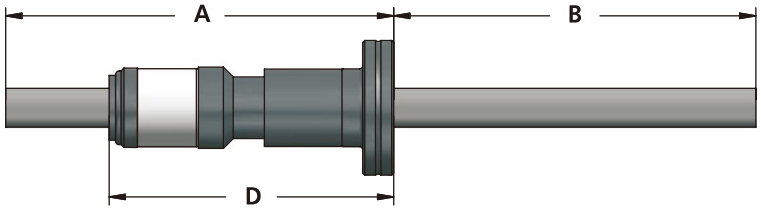

Flange Size	Pins or Tubes	# of Pins or Tubes	Conductor Material	Amps Per Pin/Tube	Dimensions, (in.)		
					A	B	D
CF16	Pin	1	Nickel	125	3.60	3.70	2.60
CF16	Pin	1	Copper	250	3.65	3.60	2.65
CF16	Tube	1	Copper	250	3.65	3.60	2.65
CF40	Pin	1	Copper	250	3.15	4.10	2.15
CF40	Tube	1	Copper	250	3.15	4.10	2.15
CF40	Pin	1	Copper	600	3.85	3.40	2.85
CF40	Tube	1	Copper	600	3.80	4.10	2.80
CF40	Pin	2	Copper	250	2.90	4.40	1.90

KF Flange Voltage: 3,000 Amperage: 250; 600

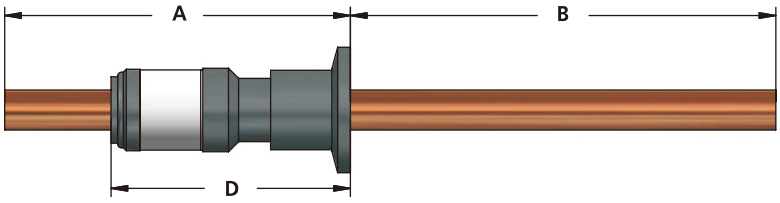

Flange Size	Pins or Tubes	# of Pins or Tubes	Conductor Material	Amps Per Pin/Tube	Dimensions, (in.)		
					A	B	D
KF16	Pin	1	Nickel	250	3.15	4.10	2.15
KF16	Pin	1	Copper	250	3.15	4.10	2.15
KF25	Tube	1	Copper	250	3.15	4.10	2.15
KF40	Pin	1	Copper	250	3.15	4.10	2.15
KF40	Tube	1	Copper	250	3.15	4.10	2.15
KF40	Pin	1	Copper	600	3.85	3.40	2.85
KF40	Tube	1	Copper	600	3.80	4.10	2.80
KF50	Pin	1	Copper	600	3.85	4.40	2.85
KF50	Tube	2	Copper	250	3.15	4.10	2.15
KF50	Pin	2	Copper	250	3.15	4.10	2.15

CF Flange Voltage: 5,000 Amperage: 1;2;5;15;30

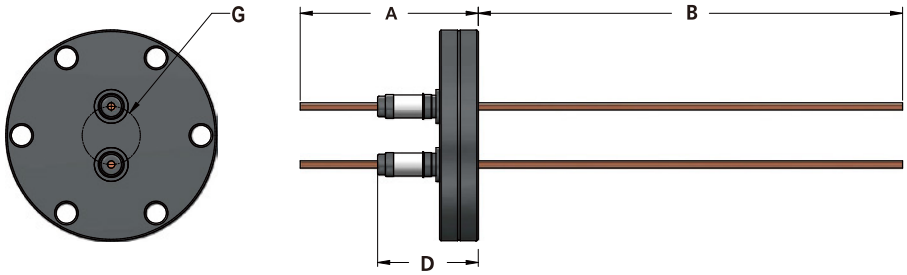

Flange Size	Pins or Tubes	#of Pins or Tubes	Conductor Material	Amps Per Pin/Tube	Dimensions, (in.)			
					A	B	D	G
CF16	Pin	1	Nickel	5	1.85	2.15	0.85	N/A
CF40	Pin	1	Nickel	5	1.85	2.15	0.85	N/A
CF16	Pin	1	Nickel	15	2.30	5.00	1.20	N/A
CF40	Pin	1	Nickel	15	2.30	5.00	1.20	N/A
CF16	Pin	1	Stainless Steel	1	1.85	2.15	0.85	N/A
CF40	Pin	1	Stainless Steel	1	1.85	2.15	0.85	N/A
CF16	Pin	1	Stainless Steel	2	2.30	5.00	1.20	N/A
CF40	Pin	1	Stainless Steel	2	2.30	5.00	1.20	N/A
CF16	Pin	1	Copper	15	1.85	2.15	0.85	N/A
CF40	Pin	1	Copper	15	1.85	2.15	0.85	N/A
CF16	Pin	1	Copper	30	2.30	5.00	1.20	N/A
CF40	Pin	1	Copper	30	2.30	5.00	1.20	N/A
CF16	Pin	2	Nickel	5	2.37	1.63	1.37	0.31
CF40	Pin	2	Nickel	5	1.87	2.13	0.87	0.31
CF16	Pin	2	Nickel	15	2.25	5.32	1.23	0.36
CF40	Pin	2	Nickel	15	2.30	5.00	1.20	0.75
CF16	Pin	2	Stainless Steel	1	2.37	1.63	1.37	0.31
CF40	Pin	2	Stainless Steel	1	1.87	2.13	0.87	0.31
CF40	Pin	2	Stainless Steel	2	2.30	5.00	1.20	0.75
CF16	Pin	2	Copper	15	2.37	1.63	1.37	0.31
CF40	Pin	2	Copper	15	1.87	2.13	0.87	0.31
CF16	Pin	2	Copper	30	2.25	5.32	1.23	0.36
CF40	Pin	2	Copper	30	2.30	5.00	1.20	0.75
CF16	Pin	4	Nickel	15	2.00	5.80	1.00	0.41
CF16	Pin	4	Copper	30	2.00	580	1.00	0.41
CF16	Pin	4	Nickel	5	2.37	1.63	1.37	0.375
CF40	Pin	4	Nickel	5	1.87	2.13	0.87	0.375
CF16	Pin	4	Stainless Steel	1	2.37	1.63	1.37	0.375
CF40	Pin	4	Stainless Steel	1	1.87	2.13	0.87	0.375
CF16	Pin	4	Copper	15	2.37	1.63	1.37	0.375
CF40	Pin	4	Copper	15	1.87	2.13	0.87	0.375
CF40	Pin	4	Nickel	15	2.25	5.32	1.23	0.62
CF40	Pin	4	Copper	30	2.25	5.32	1.23	0.62
CF40	Pin	8	Nickel	5	1.60	2.40	0.60	0.75
CF40	Pin	8	Nickel	15	2.20	5.60	1.20	1.10
CF40	Pin	8	Copper	30	2.25	5.32	1.23	1.00
CF40	Pin	12	Nickel	15	2.20	5.60	1.20	1.20
CF40	Pin	12	Copper	30	2.25	5.32	1.23	1.21

CF Flange Voltage: 5,000 Amperage: 7;75;150

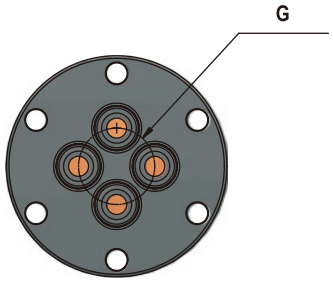

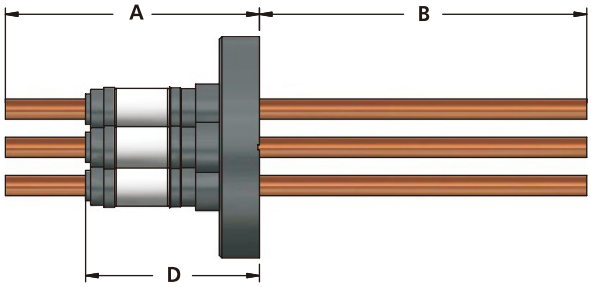

Flange Size	Pins or Tubes	#of Pins or Tubes	Conductor Material	Amps Per Pin/Tube	Dimensions, (in.)			
					A	B	D	G
CF16	Pin	1	Nickel	75	3.13	4.12	2.13	N/A
CF40	Pin	1	Nickel	75	3.13	4.12	2.13	N/A
CF16	Pin	1	Stainless Steel	7	3.13	4.12	2.13	N/A
CF40	Pin	1	Stainless Steel	7	3.13	4.12	2.13	N/A
CF40	Tube	1	Stainless Steel	7	3.13	4.12	2.13	N/A
CF16	Pin	1	Copper	150	3.13	4.12	2.13	N/A
CF16	Tube	1	Copper	150	3.13	4.12	2.13	N/A
CF40	Pin	1	Copper	150	3.13	4.12	2.13	N/A
CF40	Tube	1	Copper	150	3.13	4.12	2.13	0.87
CF40	Pin	2	Nickel	75	3.13	4.12	2.13	0.87
CF40	Pin	2	Copper	150	3.13	4.12	2.13	0.87
CF40	Tube	2	Copper	150	3.13	4.12	2.13	0.95
CF40	Tube	3	Stainless Steel	7	3.18	4.07	2.18	0.95
CF40	Pin	3	Copper	150	3.18	4.07	2.18	0.95
CF40	Tube	3	Copper	150	3.18	4.07	2.18	0.95
CF40	Pin	4	Nickel	75	3.18	4.07	2.18	0.95
CF40	Pin	4	Stainless Steel	7	3.18	4.07	2.18	0.95
CF40	Pin	4	Copper	150	3.18	4.07	2.18	0.95
CF40	Tube	4	Copper	150	3.18	4.07	2.18	0.95

KF Flange Voltage: 5,000 Amperage: 1;2;5;15;30

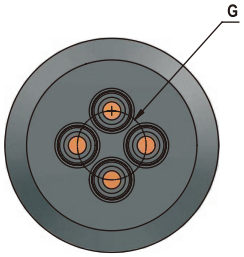

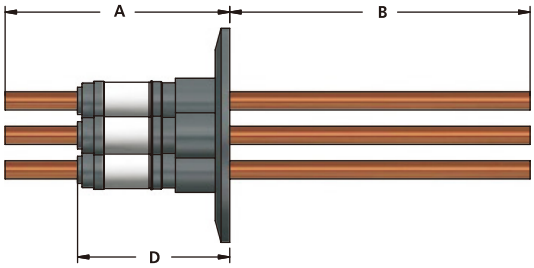

Flange Size	pins or Tubes	#of Pins or Tubes	Conductor Material	Amps / Pin/	Dimensions, (in.)			
					A	B	D	G
KF16	Pin	1	Nickel	5	1.85	2.15	0.85	N/A
KF40	Pin	1	Nickel	5	1.85	2.15	0.85	N/A
KF16	Pin	1	Nickel	15	2.30	5.00	1.20	N/A
KF40	Pin	1	Nickel	15	2.30	5.00	1.20	N/A
KF16	Pin	1	Stainless Steel	1	1.85	2.15	0.85	N/A
KF40	Pin	1	Stainless Steel	1	1.85	2.15	0.85	N/A
KF16	Pin	1	Stainless Steel	2	2.30	5.00	1.20	N/A
KF40	Pin	1	Stainless Steel	2	2.30	5.00	1.20	N/A
KF16	Pin	1	Copper	15	1.85	2.15	0.85	N/A
KF40	Pin	1	Copper	15	1.85	2.15	0.85	N/A
KF16	Pin	1	Copper	30	2.30	5.00	1.20	N/A
KF40	Pin	1	Copper	30	2.30	5.00	1.20	N/A
KF16	Pin	2	Nickel	5	1.87	2.13	0.87	0.31
KF25	Pin	2	Nickel	5	1.87	2.13	0.87	0.31
KF40	Pin	2	Nickel	5	1.87	2.13	0.87	0.31
KF40	Pin	2	Nickel	15	2.30	5.00	1.20	0.75
KF50	Pin	2	Nickel	15	2.30	5.00	1.20	0.95
KF16	Pin	2	Stainless Steel	1	1.87	2.13	0.87	0.31
KIF25	Pin	2	Stainless Steel	1	1.87	2.13	0.87	0.31
KF40	Pin	2	Stainless Steel	1	1.87	2.13	0.87	0.31
KF40	Pin	2	Stainless Steel	2	2.30	5.00	1.20	0.75
KF16	Pin	2	Copper	15	1.87	2.13	0.87	0.31
KF25	Pin	2	Copper	15	1.87	2.13	0.87	0.31
KF40	Pin	2	Copper	15	1.87	2.13	0.87	0.31
KF16	Pin	2	Copper	30	1.95	5.62	0.93	0.39
KF25	Pin	2	Copper	30	2.30	5.00	1.20	0.50
KF40	Pin	2	Copper	30	2.30	5.00	1.20	0.75
KF16	Pin	4	Nickel	5	1.87	2.13	0.87	0.375
KF40	Pin	4	Nickel	5	1.87	2.13	0.87	0.375
KF16	Pin	4	Stainless Steel	1	1.87	2.13	0.87	0.375
KF25	Pin	4	Stainless Steel	1	1.87	2.13	0.87	0.375
KF40	Pin	4	Stainless Steel	1	1.87	2.13	0.87	0.375
KF16	Pin	4	Copper	15	1.87	2.13	0.87	0.375
KF25	Pin	4	Copper	15	1.87	2.13	0.87	0.375
KF40	Pin	4	Copper	15	1.87	2.13	0.87	0.375
KF50	Pin	4	Copper	15	1.87	2.13	0.87	0.375
KF40	Pin	4	Copper	30	1.95	5.62	0.93	0.62
KF40	Pin	8	Copper	30	195	5.62	0.93	1.00

KF Flange Voltage: 5,000 Amperage: 150

Flange Size	#of Pins	Conductor Material	Amps / Pin	Dimensions, (in.)					
				A	B	C	D	E	F
KF16	1	Copper	150	3.13	4.12	1.33	2.13	0.54	0.25
KF50	4	Copper	150	3.18	4.07	2.75	2.18	0.57	0.25

CF Flange Voltage: 12,000 Amperage: 30

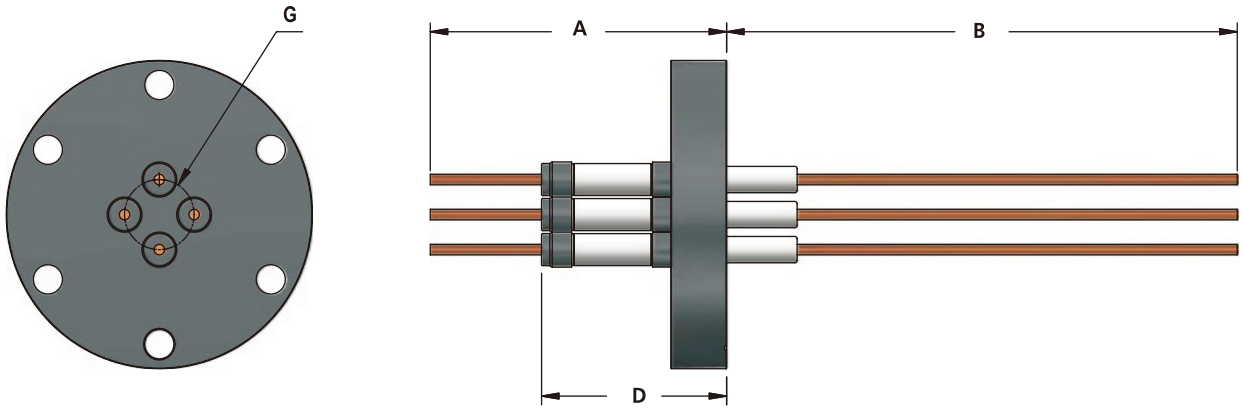

Flange Size	#of Pins or Tubes	Conductor Material	Amps / Pin	Dimensions, (in.)			
				A	B	D	G
CF16	1	Nickel	15	2.63	4.94	1.67	N/A
CF16	1	Copper	30	2.63	4.94	1.67	N/A
CF40	1	Nickel	15	2.63	4.94	1.67	N/A
CF40	1	Copper	30	2.63	4.94	1.67	N/A
CF40	2	Copper	30	2.63	4.94	1.67	0.50
CF40	2	Nickel	15	2.63	4.94	1.67	0.75
CF40	4	Nickel	15	2.70	4.10	0.70	1.00
CF40	4	Copper	30	2.70	4.10	0.70	1.00



CF Flange Voltage: 12,000 Amperage: 7;75;150

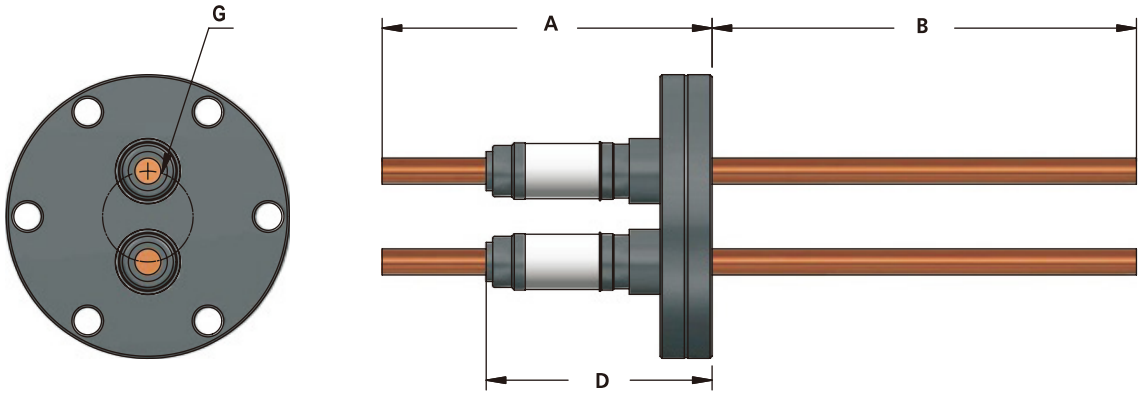

Flange Size	pins or Tubes	#of Pins or Tubes	Conductor Material	Amps / Pin	Dimensions, (in.)			
					A	B	D	G
CF16	Tube	1	Nickel	75	3.10	4.20	2.10	N/A
CF16	Tube	1	Stainless Steel	7	3.10	4.20	2.10	N/A
CF16	Tube	1	Copper	150	3.10	4.20	2.10	N/A
CF40	Tube	1	Nickel	75	3.10	4.20	2.10	N/A
CF40	Tube	1	Stainless Steel	7	3.10	4.20	2.10	N/A
CF40	Tube	1	Copper	150	3.10	4.20	2.10	N/A
CF16	Pin	1	Nickel	75	3.10	4.20	2.10	N/A
CF16	Pin	1	Stainless Steel	7	3.10	4.20	2.10	N/A
CF16	Pin	1	Copper	150	3.10	4.20	2.10	N/A
CF40	Pin	1	Nickel	75	3.10	4.20	2.10	N/A
CF40	Pin	1	Stainless Steel	7	3.10	4.20	2.10	N/A
CF40	Pin	1	Copper	150	3.10	4.20	2.10	N/A
CF40	Pin	2	Nickel	75	3.10	4.20	2.10	0.87
CF40	Tube	2	Nickel	75	3.10	4.20	2.10	0.87
CF40	Pin	2	Stainless Steel	7	3.10	4.20	2.10	0.87
CF40	Tube	2	Stainless Steel	7	3.10	4.20	2.10	0.87
CF40	Pin	2	Copper	150	3.10	4.20	2.10	0.87
CF40	Tube	2	Copper	150	3.10	4.20	2.10	0.87
CF40	Pin	3	Nickel	75	3.10	4.20	2.10	0.87
CF40	Tube	3	Copper	150	3.10	4.20	2.10	0.87
CF40	Pin	4	Copper	150	2.90	4.40	2.10	0.94
CF40	Tube	4	Copper	150	2.90	4.40	2.10	0.94

KF Flange Voltage: 12,000 Amperage: 15;30

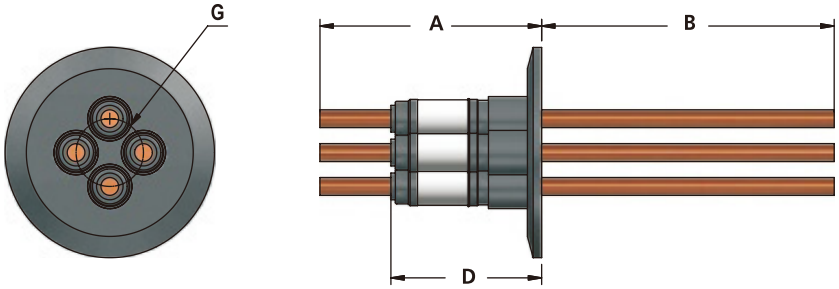

Flange Size	#of Pins	Conductor Material	Amps/ Pin	Dimensions, (in.)			
				A	B	D	G
KF16	1	Nickel	15	2.63	4.94	1.67	N/A
KF16	1	Copper	30	2.63	4.94	1.67	N/A
KF40	1	Nickel	15	2.63	4.94	1.67	N/A
KF40	1	Copper	30	2.63	4.94	1.67	N/A
KF25	1	Copper	30	2.63	4.94	1.67	0.39
KF40	2	Copper	30	2.63	4.94	1.67	0.50
KF40	2	Nickel	15	2.63	4.94	1.67	0.75
KF40	4	Nickel	15	2.33	5.20	1.37	0.62
KF40	4	Copper	30	2.33	5.20	1.37	0.62

Voltage: 12,000 Amperage: 7;15;150

Flange Size	pins or Tubes	#of Pins	Conductor Material	Amps/ Pin	Dimensions, (in.)			
					A	B	D	G
KF16	Tube	1	Nickel	75	3.10	4.20	2.10	N/A
KF16	Tube	1	Stainless Steel	7	3.10	4.20	2.10	N/A
KF16	Tube	1	Copper	150	3.10	4.20	2.10	N/A
KF40	Tube	1	Nickel	75	3.10	4.20	2.10	N/A
KF40	Tube	1	Stainless Steel	7	3.10	4.20	2.10	N/A
KF40	Tube	1	Copper	150	3.10	4.20	2.10	N/A
KF16	Pin	1	Nickel	75	3.10	4.20	2.10	N/A
KF16	Pin	1	Stainless Steel	7	3.10	4.20	2.10	N/A
KF16	Pin	1	Copper	150	3.10	4.20	2.10	N/A
KF40	Pin	1	Nickel	75	3.10	4.20	2.10	N/A
KF40	Pin	1	Stainless Steel	7	3.10	4.20	2.10	N/A
KF40	Pin	1	Copper	150	3.10	4.20	2.10	N/A
KF25	Pin	1	Nickel	75	3.10	4.20	2.10	N/A
KF25	Pin	1	Stainless Steel	7	3.10	4.20	2.10	N/A
KF25	Pin	1	Copper	150	3.10	4.20	2.10	N/A
KF50	Pin	1	Copper	150	3.10	4.20	2.10	N/A
KF40	Pin	2	Nickel	75	3.10	4.20	2.10	0.75
KF40	Tube	2	Nickel	75	3.10	4.20	2.10	0.75
KF40	Pin	2	Stainless Steel	7	3.10	4.20	2.10	0.75
KF40	Tube	2	Stainless Steel	7	3.10	4.20	2.10	0.75
KF40	Pin	2	Copper	150	3.10	4.20	2.10	0.75
KF40	Tube	2	Copper	150	3.10	4.20	2.10	0.75
KF50	Pin	2	Copper	150	2.90	4.40	2.10	0.94
KF50	Pin	4	Stainless Steel	7	2.90	4.40	2.10	0.94
KF50	Pin	4	Copper	150	2.90	4.40	2.10	0.94
KF50	Tube	4	Copper	150	2.90	4.40	2.10	0.94

KF Flange Voltage: 20,000 ;25,000;30,000 Amperage: 2;15;30;75;150

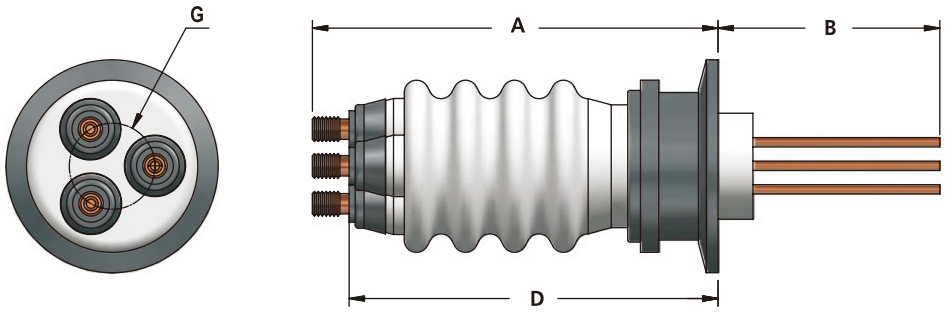

Flange Size	#of Pins	Amps/ Pin	Voltage (kV)	Conductor Material	Dimensions, (in.)			
					A	B	D	H
KF16	1	15	20	Nickel	2.63	5.63	2.80	N/A
KF40	1	15	20	Nickel	2.63	5.63	2.80	N/A
KF40	1	2	20	Stainless Steel	2.63	5.63	2.80	N/A
KF40	1	75	20	Nickel	2.63	3.47	2.78	N/A
KF40	1	150	20	Copper	2.63	3.47	2.78	N/A
KF40	1	3	25	Stainless Steel	2.63	5.31	3.19	N/A
KF40	1	3	30	Stainless Steel	2.63	4.70	3.72	N/A
KF40	2	30	25	Copper	2.33	1.82	3.66	0.88
KF40	3	30	25	Copper	2.33	2.37	6.62	0.88



CF Flange
Voltages: 20,000 ;25,000; 30,000; 50,000; 60,000; 100,000
Amperage: 2; 3;15; 30; 75; 100; 150

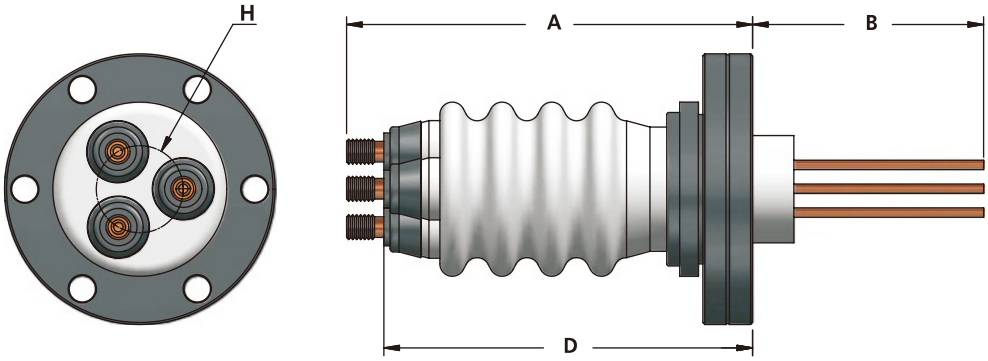

Flange Size	#of Pins	Amps/ Pin	Voltage (kV)	Conductor Material	Dimensions, (in.)				
					A	B	D	G	H
CF16	1	15	20	Nickel	3.67	5.13	3.30	0.03	N/A
CF16	1	30	20	Copper	3.67	5.13	3.30	0.03	N/A
CF40	1	2	20	Stainless Steel	3.17	5.63	2.80	0.03	N/A
CF40	1	75	20	Nickel	3.78	3.47	2.78	0.59	N/A
CF40	1	150	20	Copper	3.78	3.47	2.78	0.59	N/A
CF40	1	3	25	Stainless Steel	3.57	5.31	3.19	N/A	N/A
CF40	1	3	30	Stainless Steel	4.10	4.70	3.72	0.62	N/A
CF40	1	55	30	Copper	4.10	4.70	3.72	0.62	N/A
CF63	1	3	60	Stainless Steel	7.82	4.61	6.82	0.86	N/A
CF100	1	3	60	Stainless Steel	7.82	4.61	6.82	0.86	N/A
CF40	1	30	25	Copper	4.04	1.82	3.66	0.70	0.88
CF40	2	30	25	Copper	4.00	2.37	3.62	0.70	0.88
CF100	3	30	25	Copper	4.00	2.37	3.62	0.70	0.88



CF Flange

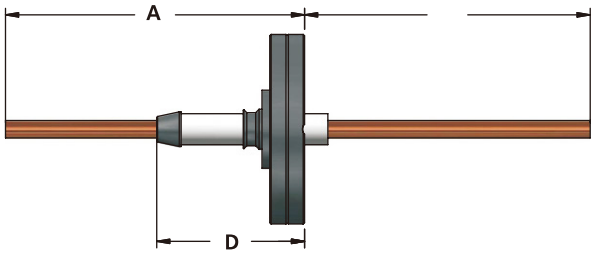

Figure 1 (1 tube)

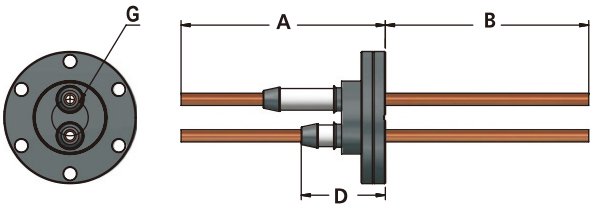

Figure 2 (2 tubes)

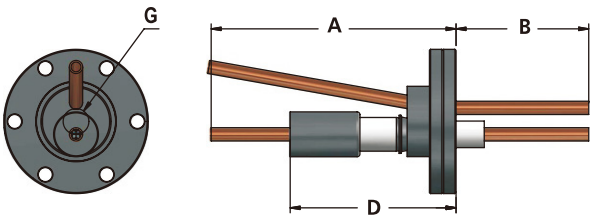

Figure 3 (2 tubes)

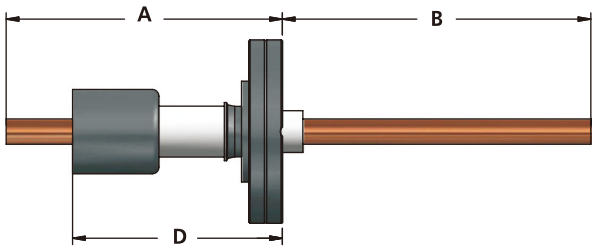

Figure 4 (1 tube)

Flange Size	#of Pins	Voltage (kV)	Conductor Material	Power (kW)	Frequency	Dimensions, (in.)			
						A	B	D	G
CF40	1	8	Copper	10	450kHz	4.13	4.26	1.96	N/A
CF40	2	8	Copper	10	450kHz	4.25	4.14	2.50	0.75
CF40	2	10	Copper	20	13.56MHz	4.61	2.50	3.12	0.80
CF40	1	10	Copper	35	13.56MHz	4.23	4.52	3.25	N/A

KF Flange

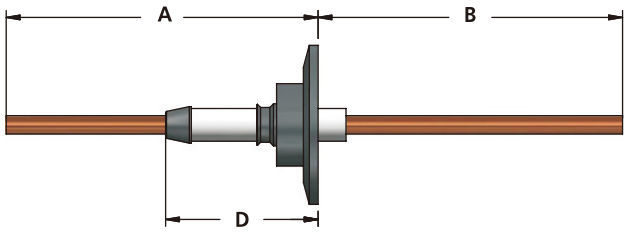

Figure 1 (1 tube)

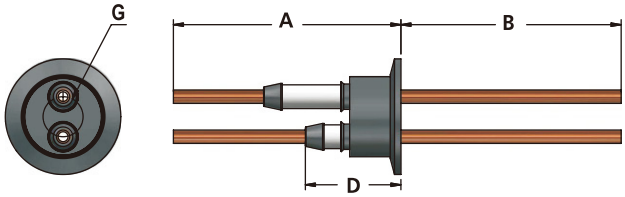

Figure 2 (2 tubes)

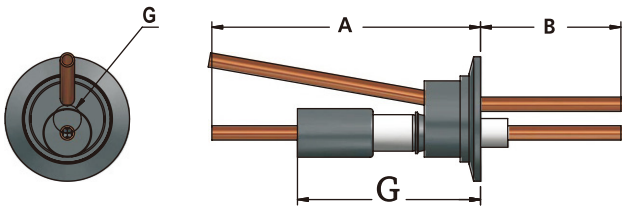

Figure 3 (2 tubes)

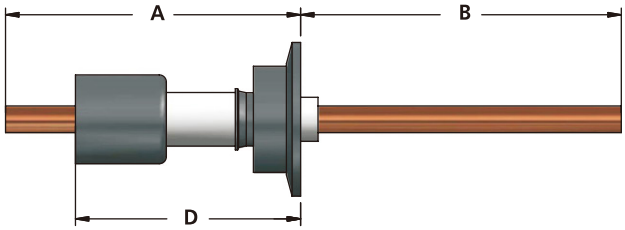

Figure 4 (1 tube)

Flange Size	#of Pins	Voltage (kV)	Conductor Material	Power (kW)	Frequency	Dimensions, (in.)			
						A	B	D	G
KF40	1	8	Copper	10	450kHz	4.08	4.31	1.91	N/A
KF40	2	8	Copper	10	450kHz	4.29	4.10	2.54	0.75
KF40	2	10	Copper	20	13.56MHz	4.65	2.45	3.16	0.80
KF40	1	10	Copper	35	13.56MHz	4.18	4.57	3.23	N/A

BNC Feedthroughs
BNC 引线

Bayonet navel connector (BNC) coaxial feedthroughs:

- Single-ended assemblies come with one air-side cable connector but with out vacuum-side connectors.
- Optional push on contacts and vacuum-compatible cables are available
- Feature grounded or floating shields
- Designed and rated for use in high vacuum and UHV applications
- Double-ended assemblies come with air-side connector only

CF Flange, Single-Ended

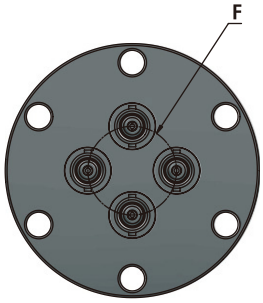

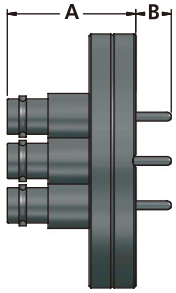

Part Number	#of Pins	Conductor Material	Flange Size	Voltage (DC)	Amps/ Pin	Dimensions, (in.)		
						A	B	F
66826-012032IFTBG	1	Stainless Steel	CF16	500V	3	1.33	0.40	N/A
66826-012033IFTBG	1	Stainless Steel	CF40	500V	3	1.33	0.40	N/A
66826-022033IFTBG	2	Stainless Steel	CF40	500V	3	1.33	0.40	0.87
66826-032033IFTBG	3	Stainless Steel	CF40	500V	3	1.33	0.40	0.87
66826-042033IFTBG	4	Stainless Steel	CF40	500V	3	1.33	0.40	0.95
66826-012032IFTBF	1	Stainless Steel	CF16	2500V	3	2.70	0.42	N/A
66826-012033IFTBF	1	Stainless Steel	CF40	2500V	3	0.89	0.84	N/A

KF Flange, Single-Ended

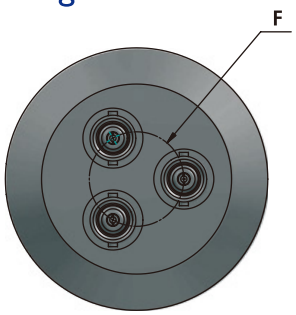

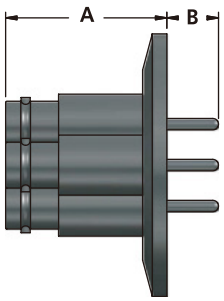

Part Number	#of Pins	Conductor Material	Flange Size	Voltage (DC)	Amps/ Pin	Dimensions, (in.)		
						A	B	F
66826-012038IFTBG	1	Stainless Steel	KF16	500V	3	1.33	0.40	N/A
66826-012038B1FTBG	1	Stainless Steel	KF40	500V	3	1.33	0.40	N/A
66826-022038B1FTBG	2	Stainless Steel	KF40	500V	3	1.33	0.40	0.78
66826-032038B1FTBG	3	Stainless Steel	KF40	500V	3	1.33	0.40	0.78
66826-032038CIFTBG	3	Stainless Steel	KF40	500V	3	1.33	0.40	0.87
66826-042038B1FTBG	4	Stainless Steel	KF50	500V	3	1.33	0.40	0.87
66826-042038CIFTBG	4	Stainless Steel	KF40	500V	3	1.33	0.40	0.95
66826-052038CIFTBG	5	Stainless Steel	KF50	500V	3	1.33	0.40	0.95
66826-012038IFTBF	1	Stainless Steel	KF16	2500V	3	2.70	0.50	N/A
66826-012038B1FTBF	1	Stainless Steel	KF40	2500V	3	0.89	0.84	N/A

Specifications

Maximurn Voltage:	500 VDC
Grounded Shield;	2,500 VDC
Floating Shield: Shield-Ground:	500 VDC
Floating Shield: ShieldPin:	3A
Maximum Current:	Stainless Steel
Conductor:	Alumina
nsulator:Cable:	RG-58U
Connection:	Bayonet
Vacuum Application:	HV or UHV
Temperature:	
Weld Adapter, CF:	-200° C to +450°C
KF, O-Ring, NPT	To +150°C
Max. Ramp Rate:	25° C/minute
Cable Connectors:	-65' C to +165°C

*NOTE: Standard feedthroughs are unmatched. 50-ohm matched impedance connectors are available at an additional cost.

CF Flange, Double-Ended

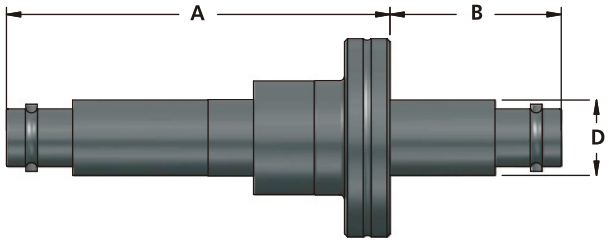

Part Number	#of Pins	Conductor Material	Flange Size	Voltage (DC)	Amps/ Pin	Dimensions, (in.)		
						A	B	D
66828-012032IFDBG	1	Stainless Steel	CF16	500V	3	2.53	1.13	0.50
66828-012033IFDBG	1	Stainless Steel	CF40	500V	3	2.03	1.63	0.50
66828-012033AIFDBG	1	Stainless Steel	CF50	500V	3	2.03	1.63	0.50
66828-012032MIFDBG	1	Stainless Steel	CF16	500V	3	0.89	0.64	0.50
66828-012033MIFDBG	1	Stainless Steel	CF40	500V	3	0.89	0.64	0.50
66828-012032IFDBF	1	Stainless Steel	CF16	2500V	3	2.96	1.21	0.50
66828-012033IFDBF	1	Stainless Steel	CF40	2500V	3	2.46	1.71	0.50
66828-042036IFDBF	4	Stainless Steel	CF63	2500V	3	2.46	1.71	0.50

KF (QF) Flange, Double-Ended

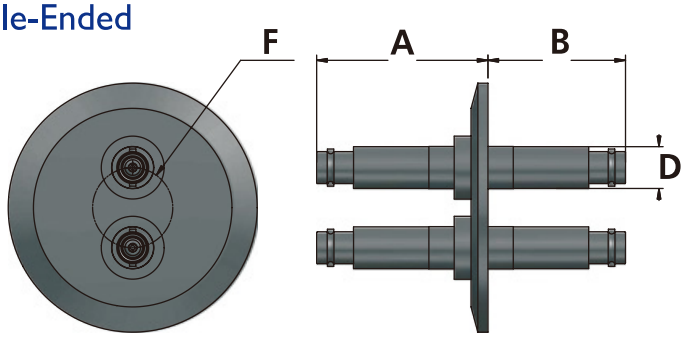

Part Number	#of Pins	Conductor Material	Flange Size	Voltage (DC)	Amps/ Pin	Dimensions, (in.)			
						A	B	D	F
66828-012038IFDBG	1	Stainless Steel	KF16	500V	3	2.53	1.63	0.50	N/A
66828-012038AIFDBG	1	Stainless Steel	KF25	500V	3	2.03	1.63	0.50	N/A
66828-012038BIFDBG	1	Stainless Steel	KF40	500V	3	2.03	1.63	0.50	N/A
66828-012038CIFDBG	1	Stainless Steel	KF50	500V	3	2.53	1.63	0.50	N/A
66828-022038CIFDBG	2	Stainless Steel	KF50	500V	3	2.03	1.63	0.50	0.95
66828-012038IFDBF	1	Stainless Steel	KF16	2500V	3	2.46	1.71	0.50	N/A
66828-012038A1FDBF	1	Stainless Steel	KF25	2500V	3	2.46	1.71	0.50	N/A
66828-012038B1FDBF	1	Stainless Steel	KF40	2500V	3	2.46	1.71	0.50	N/A

Miniature High Voltage(MHV)

MHV引线

Feature grounded or floating shields
Designed and rated for use in high vacuum and UHV applications
Suitable for cryogenic temperatures
Single-ended assemblies come with one air-side cable connector, without vacuum-side connectors. Options include power push-on contacts and vacuum cable assemblies
Double-ended assemblies come with air-side connectors only

NOTE: Do not crossmate MHV feedthroughs with BNC feedthroughs. MHV feedthroughs are rated at higher voltages

Specifications

Maximum Voltage: Grounded Shield: 5,000 VDC; Floating Shield: Shield-Ground: 2,500 VDC; Floating Shield: Shield-Pin: 5,000 VDC

Maximum Current: 3A
Conductor: Stainless Steel
Insulator: Alumina
Cable: RG-59U
Connection: Bayonet
Vacuum Application: HV or UHV; Weld Adapter, CF: -200°C to +450°C; KF,O-Ring, NPT: to +150°C

Temperature: Max Ramp Rate: 25°C/minute; Cable Connectors: -65°C to +165°C

CF Flange, Single-Ended

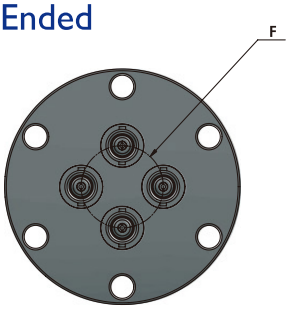

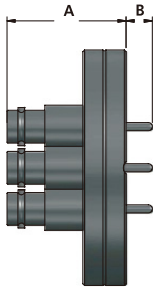

Part Number	#of Pins	Conductor Material	Flange Size	Voltage (DC)	Amps/ Pin	Dimensions, (in.)	
						A	B
66830-012032IFTMG	1	Stainless Steel	CF16	5kV	3	1.33	0.35
66830-012033IFTMG	1	Stainless Steel	CF40	5kV	3	1.33	0.35
66830-022033IFTMG	2	Stainless Steel	CF40	5kV	3	1.33	0.35
66830-032033IFTMG	3	Stainless Steel	CF40	5kV	3	1.33	0.35
66830-042033IFTMG	4	Stainless Steel	CF40	5kV	3	1.33	0.35
66830-012032IFTMF	1	Stainless Steel	CF16	2500V	3	2.70	0.42
66830-012033IFTMF	1	Stainless Steel	CF40	2500V	3	0.84	0.84

KF(QF) Flange, Single-Ended

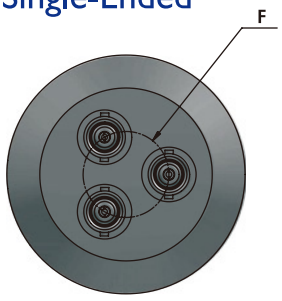

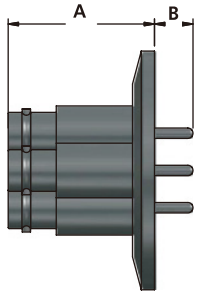

Part Number	#of Pins	Conductor Material	Flange Size	Voltage (DC)	Amps/ Pin	Dimensions, (in.)		
						A	B	F
66830-012038IFTMG	1	Stainless Steel	KF16	5kV	3	1.33	0.35	N/A
66830-012038BIFTMG	1	Stainless Steel	KF40	5kV	3	1.33	0.35	N/A
66830-022038BIFTMG	2	Stainless Steel	KF40	5kV	3	1.33	0.35	0.78
66830-032038BIFTMG	3	Stainless Steel	KF40	5kV	3	1.33	0.35	0.78
66830-032038CIFTMG	3	Stainless Steel	KF40	5kV	3	1.33	0.35	0.87
66830-042038BIFTMG	4	Stainless Steel	KF50	5kV	3	1.33	0.35	0.95
66830-042038CIFTMG	4	Stainless Steel	KF40	5kV	3	1.33	0.35	0.95
66830-012038IFTMF	1	Stainless Steel	KF16	2.5KeV	3	2.70	0.61	N/A
66830-012038BIFTMF	1	Stainless Steel	KF40	2.5KeV	3	0.84	0.84	N/A

CF Flange, Double-Ended

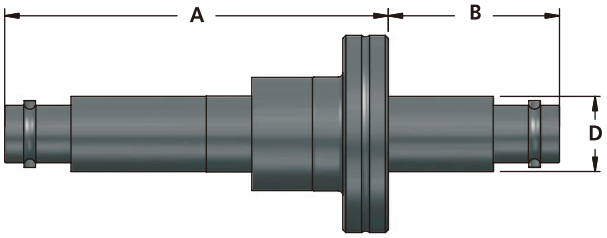

Part Number	#of Pins	Conductor Material	Flange Size	Voltage (DC)	Amps/ Pin	Conductor Material	Dimensions, (in.)		
							A	B	D
66832-012032IFDMG	1	Stainless Steel	CF16	5kV	3	Unmatched	2.53	1.13	0.50
66832-012033IFDMG	1	Stainless Steel	CF40	5kV	3	Unmatched	2.03	1.63	0.50
66832-022033IFDMG	2	Stainless Steel	CF40	5kV	3	Unmatched	2.03	1.63	0.50
66832-012032IFDMF	1	Stainless Steel	CF16	2500V	3	Unmatched	2.96	1.21	0.50
66832-012033IFDMF	1	Stainless Steel	CF40	2500V	3	Unmatched	2.46	1.71	0.50

KF Flange, Double-Ended

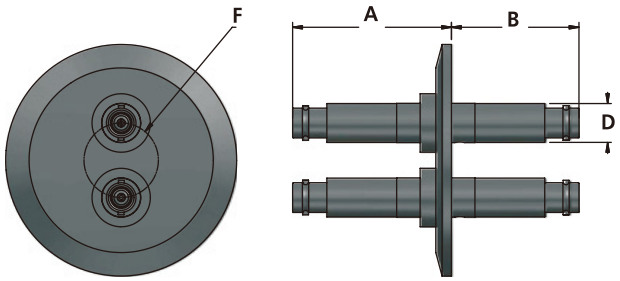

Part Number	#of Pins	Conductor Material	Flange Size	Voltage (DC)	Amps/ Pin	Dimensions, (in.)			
						A	B	D	F
66832-012038IFDMG	1	Stainless Steel	KF16	5kV	3	2.03	1.63	0.50	N/A
66832-012038BIFDMG	1	Stainless Steel	KF40	5kV	3	2.03	1.63	0.50	N/A
66832-022038CIFDMG	2	Stainless Steel	KF50	5kV	3	2.03	1.63	0.50	0.95
66832-012038IFDMF	1	Stainless Steel	KF16	2.5KeV	3	2.46	1.71	0.50	N/A
66832-012038AIFDMF	1	Stainless Steel	KF25	2.5KeV	3	2.46	1.71	0.50	N/A
66832-012038BIFDMF	1	Stainless Steel	KF40	2.5KeV	3	2.46	1.71	0.50	N/A

SHV-B Feedthroughs

SHV–B引线

Safe, High Voltage, Bakeable (SHV-B) coaxial connectors:

Feature grounded shields
Use a ceramic dielectric suitable for baking at 450°C
Units excel in applications requiring the feedthrough to remain connected and operational at high temperatures
All asserblies come with air-side cable connectors. Vacuum- side, push-on connectors only available as optional extras

Specifications

Maximum Voltage:	
Grounded Shield:	7,500 VDC
Maximum Current:	3A
Conductor:	Stainless Steel
Insulator:	Alumina
Cable:	RG-59U
Connection:	Screw Thread
Vacuum Application:	HV or UHV
	Weld Adapter, CF: -200°C to +450°C
Temperature:	KF, O-Ring, NPT: to +150°C
	Max,Ramp Rate: 25° C/minute
	Cable Connectors: -200°C to +450°C

CF Flange， Single-Ended

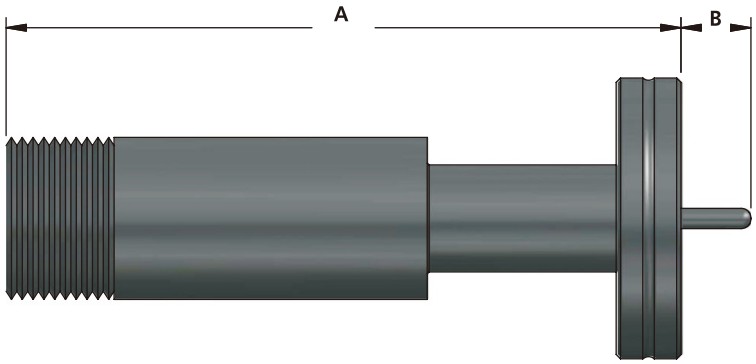

Part Number	#of Pins	Conductor Material	Flange Size	Voltage (DC)	Amps/ Pin	Dimensions, (in.)	
						A	B
66834-012032IFTTG	1	Stainless Steel	CF16	7.5kV	3	3.08	0.36
66834-012033IFTTG	1	Stainless Steel	CF40	7.5kV	3	3.08	0.36

SHV-5 Feedthroughs SHV-5引线

Designed and rated for use in high vacuum and UHV applications.
Constructed of vacuum-grade materials,including 304 stainless steel conductor pins and mounts, high-purity alumina ceramic insulation, and vacuum-tube-grade braze alloys.
Recessed female contacts in cable connectors reduce the possiblity of electrical shock while preventing cross rmating with BNC- or MHV-style components.
These coaxial assemblies have one air-side cable connector, but no vacuum-side power push-on connectors.

Specifications

Maximum Voltage: Grounded Shield: 5,000 VDC
Shield-Ground: 2,500 VDC
Cable: Shield-Pin: 5,000 VDC
Connector: RG-59U
Vacuum Application: Bayonet
HV or UHV
Temperature: Weld Adapter, CF: -200°C to +450°C
KF, O-Ring,NPT: to +150°C
Max. Ramp Rate: 25°C/minute
Cable Connectors: -65°C to +165°C

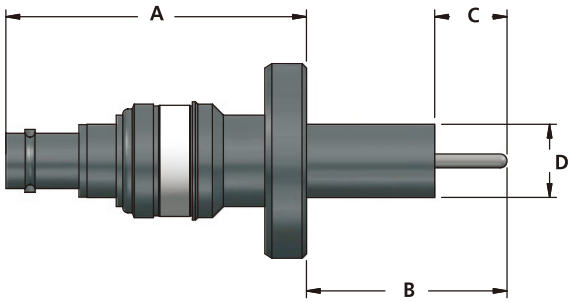

CF Flange, Single-Ended

Part Number	#of Pins	Conductor Material	Flange Size	Voltage (DC)	Amps/ Pin	Dimensions, (in.)			
						A	B	D	F
66836-011032IFTSG	1	Nickel	CF16	5kV	5	1.60	0.37	1.33	0.094
66836-011033IFTSG	1	Nickel	CF40	5kV	5	1.60	0.37	2.75	0.094
66836-021033IFTSG	2	Nickel	CF40	5kV	5	1.60	0.37	2.75	0.094
66836-031033IFTSG	3	Nickel	CF40	5kV	5	1.60	0.37	2.75	0.094
66836-041033IFTSG	4	Nickel	CF40	5kV	5	1.60	0.37	2.75	0.094
66836-011032IFTSE	1	Nickel	CF16	5kV	5	1.03	0.86	1.33	0.094
66836-011033IFTSE	1	Nickel	CF40	5kV	5	1.03	0.86	2.75	0.094
66836-021033IFTSE	2	Nickel	CF40	5kV	5	1.03	0.86	2.75	0.094
66836-031033IFTSE	3	Nickel	CF40	5kV	5	1.03	0.86	2.75	0.094
66836-041033IFTSE	4	Nickel	CF40	5kV	5	1.03	0.86	2.75	0.094
66836-011032IFTSF	1	Nickel	CF16	2.5keV	5	2.04	1.38	1.33	0.094
66836-011033IFTSF	1	Nickel	CF40	2.5keV	5	2.25	1.17	2.75	0.094

KF Flange, Single-Ended

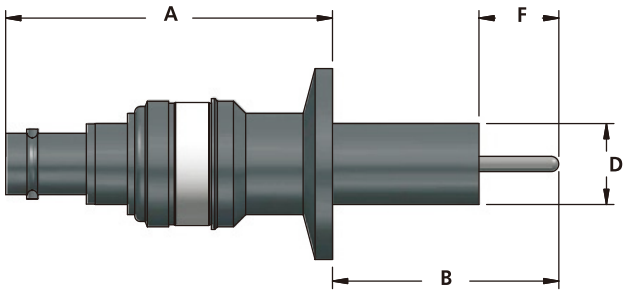

Part Number	#of Pins	Conductor Material	Flange Size	Voltage (DC)	Amps/ Pin	Dimensions, (in.)			
						A	B	D	F
66836-011038IFTSG	1	Nickel	KF16	5kV	5	1.60	0.37	0.094	N/A
66836-011038BIFTSG	1	Nickel	KF40	5kV	5	1.60	0.37	0.094	N/A
66836-031038CIFTSG	3	Nickel	KF50	5kV	5	1.60	0.37	0.094	0.87
66836-041038CIFTSG	4	Nickel	KF50	5kV	5	1.60	0.37	0.094	0.95
66836-011038IFTSE	1	Nickel	KF16	5kV	5	1.03	0.37	0.094	N/A
66836-011038BIFTSE	1	Nickel	KF40	5kV	5	1.03	0.95	0.094	N/A
66836-021038BIFTSE	2	Nickel	KF40	5kV	5	1.03	0.95	0.094	0.87
66836-031038CIFTSE	3	Nickel	KF50	5kV	5	1.03	0.95	0.094	0.87
66836-041038B1FTSE	4	Nickel	KF40	5kV	5	1.03	0.95	0.094	0.95
66836-041038CIFTSE	4	Nickel	KF50	5kV	5	1.03	0.95	0.094	0.95
66836-011038IFTSF	1	Nickel	KF16	2.5keV	5	2.01	1.45	0.094	N/A
66836-011038BIFTSF	1	Nickel	KF40	2.5keV	5	2.01	1.45	0.094	N/A

SHV-10 Feedthroughs
SHV–10引线

Designed and rated for use in high vacuum and UHV applications.
Constructed of vacuum-grade materals, including 304 stainless steel conductor pins and mounts, high-purity alumina ceramic insulation, and vacuum-tube-grade braze alloys.
Recessed female contacts in cable connecors reduce the possibility of electrical shock while preventing cross mating with BNC-or MHV-style components
These coaxial assemblies have one air-side cable connector, but no vacuum-side power push-on connectors.

Specifications

Maximum Voltage:
Grounded Shield: 10,000 VDC
Maximum Current: 5A
Conductor: Nickel
Insulator: Alumina
Cable: RG-58,58A,58C/U
Connection: Bayonet
Vacuum Application: HV or UHV
Temperature: Weld Adapter, CF: -200°C to +450°C
Max,Ramp Rate: 25°C/minute
Cable Connectors: -65°C to +165°C

CF Flange， Single-Ended

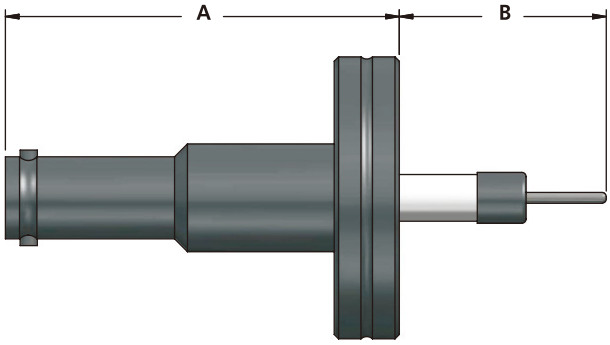

Part Number	Flange Size	#of Pins	Amps/ Pin	Voltage (DC)	Conductor Material	Conductor	Dimensions, (in.)	
							A	B
66838-011052IFTVG	CF16	1	5	10kV	Nickel	Recessed	2.40	0.38
66838-011053IFTVG	CF40	1	5	10kV	Nickel	Recessed	2.40	0.38
66838-021053IFTVG	CF40	2	5	10kV	Nickel	Recessed	2.40	0.38
66838-031053IFTVG	CF40	3	5	10kV	Nickel	Recessed	2.40	0.38
66838-041053IFTVG	CF40	4	5	10kV	Nickel	Exposed	2.40	0.38
66838-011052IFTVE	CF16	1	5	10kV	Nickel	Exposed	1.77	1.00
66838-011053IFTVE	CF40	1	5	10kV	Nickel	Exposed	1.77	1.00
66838-021053IFTVE	CF40	2	5	10kV	Nickel	Exposed	1.77	1.00
66838-031053IFTVE	CF40	3	5	10kV	Nickel	Exposed	1.77	1.00
66838-041053IFTVE	CF40	4	5	10kV	Nickel	Exposed	1.77	1.00

KF Flange, Single-Ended

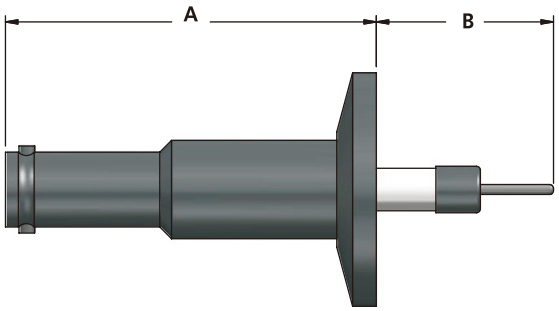

Part Number	Flange Size	#of Pins	Amps/ Pin	Voltage (DC)	Conductor Material	Conductor	Dimensions, (in.)	
							A	B
66839-011058IFTVG	KF16	1	5	10kV	Nickel	Recessed	2.40	0.38
66839-011058BIFTVG	KF40	1	5	10kV	Nickel	Recessed	2.40	0.38
66839-021058BIFTVG	KF40	2	5	10kV	Nickel	Recessed	2.40	0.38
66839-031058CIFTVG	KF50	3	5	10kV	Nickel	Recessed	2.40	0.38
66839-041058CIFTVG	KF50	4	5	10kV	Nickel	Recessed	2.40	0.38
66839-011058IFTVE	KF16	1	5	10kV	Nickel	Exposed	1.77	1.00
66839-011058B1FTVE	KF40	1	5	10kV	Nickel	Exposed	1.77	1.00
66839-021058B1FTVE	KF40	2	5	10kV	Nickel	Exposed	1.77	1.00
66839-031058CIFTVE	KF50	3	5	10kV	Nickel	Exposed	1.77	1.00
66839-041058CIFTVE	KF50	4	5	10kV	Nickel	Exposed	1.77	1.00

CF Flange, Double-Ended

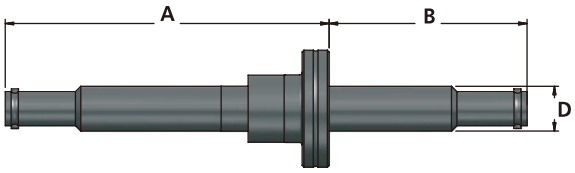

Part Number	Flange Size	#of Pins	Amps/ Pin	Voltage (DC)	Conductor Material	Dimensions, (in.)		
						A	B	D
66840-0110521FDVG	CF16	1	5	10kV	Nickel	3.73	2.83	0.495
66840-011053IFDVG	CF40	1	5	10kV	Nickel	3.73	2.83	0.495

KF Flange, Double-Ended

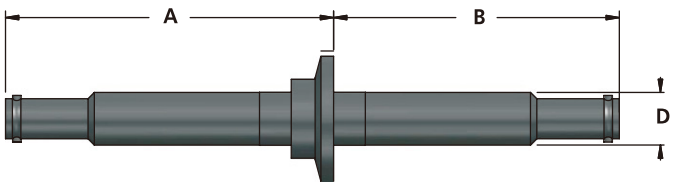

Part Number	Flange Size	#of Pins	Amps/ Pin	Voltage (DC)	Conductor Material	Dimensions, (in.)		
						A	B	D
66840-011058IFDVG	KF16	1	5	10kV	Nickel	3.23	2.83	0.495
66840-011058BIFDVG	KF40	1	5	10kV	Nickel	3.23	2.83	0.495

SHV-20 Feedthroughs

SHV–20引线

Safe, High Voltage to 20kV (SHV-20) coaxial feedthroughs:

Feature grounded shields
Have recessed or exposed ceramic insulators
Offer the highest voltage and current ratings of the SHV line
Recessed female contacts in cable connectors reduce the possibility of electrical shock
Assemblies have air-side cable connectors (vacuum-side push-on connectors are available as accessories)

Specifications

Maximum Voltage:
Grounded Shield: 20,000 VDC
Maximum Current: 15A
Conductor: Nickel
Insulator: Alumina
Cable: RG-8U
Connection: Bayonet
Vacuum Application: HV or UHV
Temperature: Weld Adapter, CF: -200°C to +450°C
Max,Ramp Rate: 25°C/minute
Cable Connectors: -40°C to +100°C

CF Flange， Single-Ended

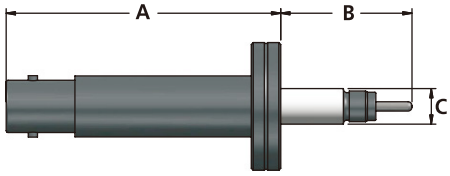

Part Number	#of Pins	Conductor Material	Flange Size	Voltage (DC)	Amps/ Pin	Dimensions, (in.)		
						A	B	C
66842-011152IFTXG	1	Nickel	CF16	20kV	15	3.76	0.36	1.33
66842-011152IFTXE	1	Nickel	CF16	20kV	15	3.75	0.36	1.33
66842-021153IFTXE	2	Nickel	CF40	20kV	15	3.75	1.37	2.75



Type N Coaxial Feedthroughs
N系列同轴引线

Use Nickel as conductor materia.
Feature grounded shields.
Feedthroughs have air-side cable connectors (vacuum-side push-on connectors are available as accessories for single- ended versions only) .

Specifications

Maximum Voltage:
Grounded Shield: 500 VDC
Maximum Current: 3A
Conductor: Nickel
Insulator: Alumina
Cable: RG-8U, RG-9U, RG-10U
Connection: Screw Thread
Vacuum Application: HV or UHV

Temperature: Weld Adapter, CF: -200°C to +450°C
KF, O-Ring, NPT: to +150°C
Max. Ramp Rate: 25°C/minute
Cable Connectors: -65°C to +165°C

CF Flange, Single-Ended

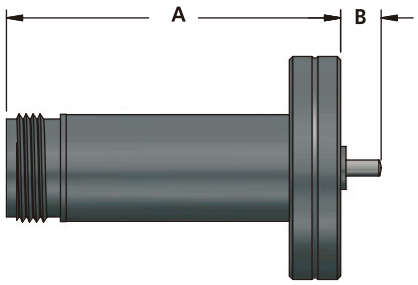

Part Number	#of Pins	Conductor Material	Flange Size	Voltage	Amps/ Pin	Dimensions, (in.)	
						A	B
66843-011032IFTNG	1	Nickel	CF16	500V	3	1.91	0.26
66843-011033IFTNG	1	Nickel	CF40	500V	3	1.91	0.26

KF Flange, Single-Ended

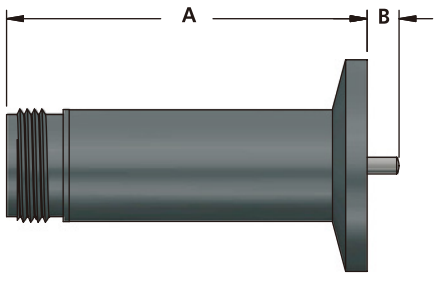

Part Number	#of Pins	Conductor Material	Flange Size	Voltage	Amps/ Pin	Dimensions, (in.)	
						A	B
66843-011038IFTNG	1	Nickel	KF16	500V	3	1.91	0.26
66843-011038IBFTNG	1	Nickel	KF40	500V	3	1.91	0.26

CF Flange, Double-Ended

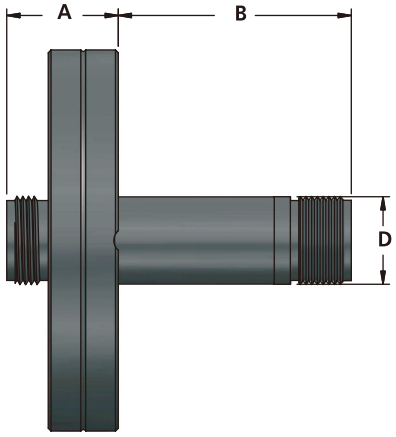

Part Number	#of Pins	Conductor Material	Flange Size	Voltage	Amps/ Pin	Dimensions, (in.)		
						A	B	D
66846-011033IFDNG	1	Nickel	CF40	500V	3	0.75	1.71	0.63

KF Flange, Double-Ended

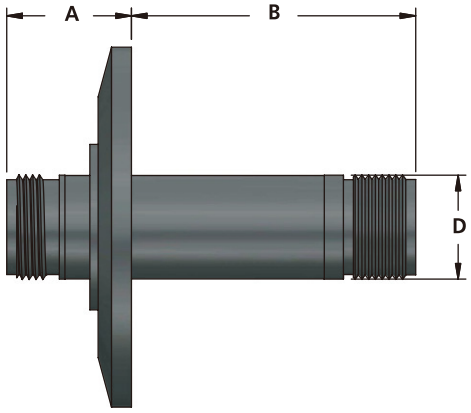

Part Number	#of Pins	Conductor Material	Flange Size	Voltage	Amps/ Pin	Dimensions, (in.)		
						A	B	D
66846-011038BIFDNG	1	Nickel	KF40	500V	3	0.75	1.71	0.63

SMA Coaxial Feedthroughs
SMA同轴引线

Made of 304 stainless steel
Feature floating or grounded shields
Versions available with 50-ohm matched impedance
Feedthroughs have air-side cable connectors (vacuum-side, push-on connectors are available as accessories)

Specifications

Maximum Voltage:	Grounded Shield: 700 VDC Floating Shield: Shield-Ground: 2,500 VDC Floating Shield: Shield-Pin: 700 VDC
Grounded Shield:	500 VDC
Maximum Current:	1A
Conductor:	48-52 ohms
Insulator:	Stainless Steel
Cable:	Alumina
Connection:	RG-8U,RG-9U.RG-10U
Vacuum Application:	Screw Thread HV or UHV
Temperature:	Weld Adapter, CF: -200°C to +450°C KF, O-RIng, NPT: To +150°C Max Ramp Rate: 25°C/minute Cable Connectors: -65°C to +165°C

CF Flange, Single-Ended

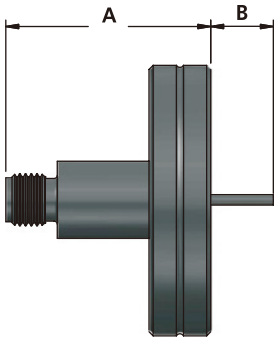

Part Number	#of Pins	Conductor Material	Flange Size	Voltage	Amps/ Pin	Dimensions, (in.)	
						A	B
66848-012012IFTCG	1	Stainless Steel	CF16	700V	1	1.00	0.35
66848-012013IFTCG	1	Stainless Steel	CF40	700V	1	1.00	0.35
66848-012013 1FTCF	1	Stainless Steel	CF40	2500V	1	0.72	0.70

KF Flange, Single-Ended

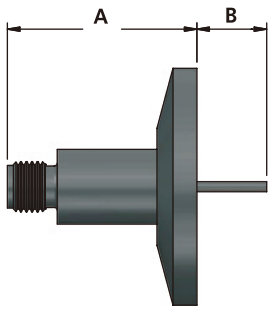

Part Number	#of Pins	Conductor Material	Flange Size	Voltage	Amps/ Pin	Dimensions, (in.)	
						A	B
66848-012018IFTCG	1	Stainless Steel	KF16	700V	1	1.00	0.35
66848-012018BIFTCG	1	Stainless Steel	KF40	700V	1	1.00	0.35

CF Flange, Double-Ended

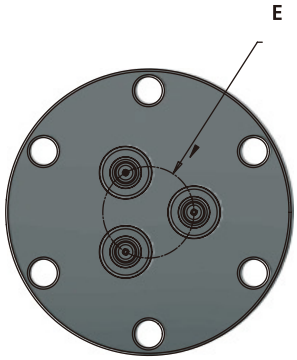

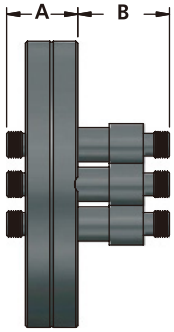

Part Number	#of Pins	Conductor Material	Flange Size	Voltage	Amps/ Pin	Impedance	Dimensions, (in.)		
							A	B	E
66849-0120121FDCG	1	Stainless Steel	CF16	700V	1	50-Ohm Matched	0.63	0.92	N/A
66849-0120131FDCG	1	Stainless Steel	CF40	700V	1	50-Ohm Matched	0.63	0.92	N/A
66849-0320131FDCG	3	Stainless Steel	CF40	700V	1	50-Ohm Matched	0.63	0.92	0.87
66849-0420131FDCG	4	Stainless Steel	CF40	700V	1	50-Ohm Matched	0.63	0.92	0.87

KF Flange, Double-Ended

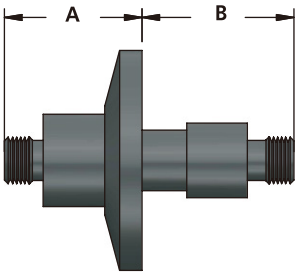

Part Number	#of Pins	Conductor Material	Flange Size	Voltage	Amps/ Pin	Impedance	Dimensions, (in.)	
							A	B
66849-012018IFDCG	1	Stainless Steel	KF16	700V	1	50-Ohm Matched	0.63	0.92
66849-012018AIFDCG	1	Stainless Steel	KF25	700V	1	50-Ohm Matched	0.63	0.92
66849-012018BIFDCG	1	Stainless Steel	KF40	700V	1	50-Ohm Matched	0.63	0.92



SMB Coaxial Feedthroughs
SMB同轴引线

Conductors made of 416 stainless steel
Feature floating or grounded shields
Feedthroughs have air-side cable connectors (vacuum-side, push-on connectors available as accessories)

Specifications

Maximum Voltage: Grounded Shield: 500 VDC
Floating Shield: Shield-Ground: 1,000 VDC
Floating Shield: Shield-Pin: 500 VDC

Maximum Current: 5A
Conductor: Stainless Steel (type 416)
Insulator: Alumina
Cable: RG-174U
Connection: Push Clip
Vacuum Application: HV or UHV

Temperature: Weld Adapter, CF: To +450°C
KF, O-Ring, NPT: To +150°C
Max. Ramp Rate: 25°C/minute
Cable Connectors: -65°C to +165°C

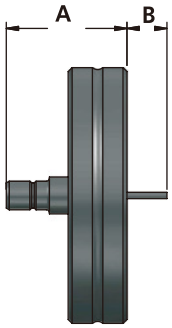

CF Flange, Single-Ended

Part Number	#of Pins	Conductor Material	Flange Size	Voltage	Amps/ Pin	Dimensions, (in.)	
						A	B
66851-012002IFTDG	1	Stainless Steel	CF16	500V	0.5	0.57	0.27
66851-012003IFTDG	1	Stainless Steel	CF40	500V	0.5	0.57	0.27
66851-012002IFTDF	1	Stainless Steel	CF16	1000V	0.5	0.51	0.33
66851-012003IFTDF	1	Stainless Steel	CF40	1000V	0.5	0.51	0.33

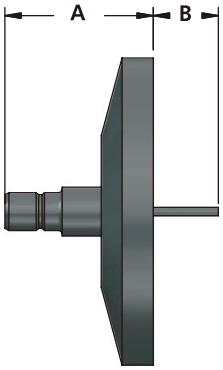

KF Flange, Single-Ended

Part Number	#of Pins	Conductor Material	Flange Size	Voltage	Amps/ Pin	Dimensions, (in.)	
						A	B
66851-012008IFTDG	1	Stainless Steel	KF16	500V	0.5	0.57	0.27
66851-012008BIFTDG	1	Stainless Steel	KF40	500V	0.5	0.57	0.27
66851-012008BIFTDF	1	Stainless Steel	KF40	1000V	0.5	0.51	0.33
66851-012008IFTDF	1	Stainless Steel	KF16	1000V	0.5	0.51	0.33

BNC TO Microdot Coaxial Feedthroughs

BNC转Mictdot同轴引线

Allow a means of adapting coaxial connection styles.
Typically used for deposition monitors (cystal head sensors),with the Microdot connection in vacuum and the BNC connection to cable to the controlle.
Assembly includes a single air-side connector.

Specifications

Maximum Voltage:	500 VDC
Grounded Shield:	
Maximum Current:	1A
Conductor:	Stainless Steel (type 416)
Insulator:	Alumina
Cable:	RG-58U
Connection:	Bayonet
Vacuum Application:	HV or UHV
	Weld Adapter, CF: To +400°C
Temperature:	KF, O-Ring, NPT: Ambient to +150°C
	Max, Ramp Rate: 25°C/ minute
	Cable Connectors: -65°C lo +165°C

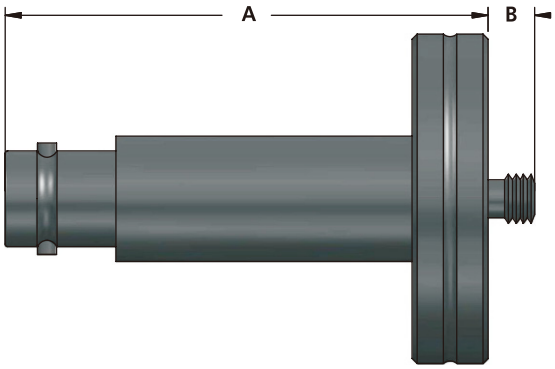

CF Flange， Double-Ended

Part Number	#of Pins	Voltage	Amps/ Pin	Flange Size	Dimensions, (in.)	
					A	B
66853-012012IFDBM	1	500V	1	CF16	1.83	0.23
66853-012013IFDBM	1	500V	1	CF40	1.83	0.23



Multi-Pin, Circular (MPC) Feedthroughs
MPC多芯引线

- Non-magnetic connector headers
- Available in configurations with 3, 6, 10, 19, 32,and 41 pins
- Feature stainless steel shells and gold-plated stainless steel alloy pins
- UHV compatible with a minimum leak rate of 1×10^{-9} scc He/sec.
- Single-ended design consists of a plug on the air side with .040" diameter pins for connection on the vacuum side*
- Double-ended design has a plug on the airside and a threaded plug connection on the vacuum side*

* Plugs not included with feedthroughs

Specifications

Conductor Material:	Stainless Steel, Gold Plated
Insulator Material:	Glass-Ceramic
Connection:	Bayonet
Vacuum Application:	HV or UHV
Max. Current:	5A
Max. Voltage:	1KV
Number of Pins:	3-41
Temperature Range:	
Weld Adapter, CF:	-269° C to +450° C
KF, O-Ring, NPT:	-25° C to +205° C
Max. Ramp Rate:	25°C/minute
Air-Side Connector:	-55° C to +35° C

CF Flange, Single-Ended

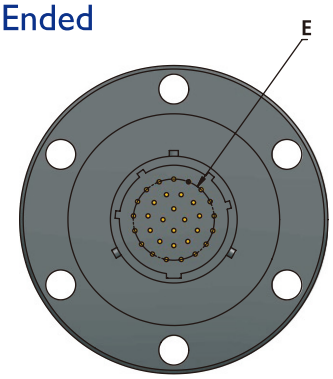

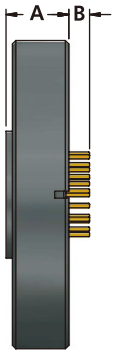

Part Number	#of Pins	Conductor Material	Voltage (DC)	Crimp or Solder	Amps/Pin	Flange Size	Dimensions, (in.)		
							A	B	E
66854-037013IFTRG	3	Gold-Plated SST	1kV	Crimp	5	CF40	0.63	0.26	0.15
66854-067013IFTRG	6	Gold-Plated SST	1kV	Crimp	5	CF40	0.63	0.26	0.26
66854-107013IFTRG	10	Gold-Plated SST	1kV	Crimp	5	CF40	0.63	0.26	0.39
66854-197013IFTRG	19	Gold-Plated SST	1kV	Crimp	5	CF40	0.63	0.26	0.52
66854-327013IFTRG	32	Gold-Plated SST	1kV	Crimp	5	CF40	0.63	0.26	0.72
66854-417013AIFTRG	41	Gold-Plated SST	1kV	Crimp	5	CF50	0.63	0.26	0.84

KF Flange, Single-Ended

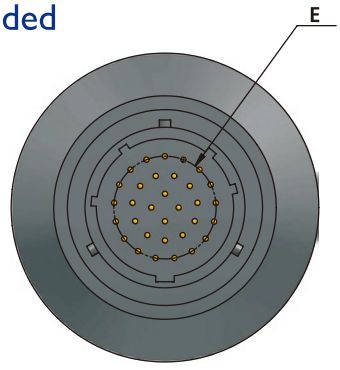

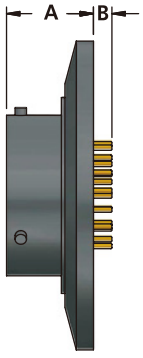

Part Number	#of Pins	Conductor Material	Voltage (DC)	Crimp or Solder	Amps/Pin	Flange Size	Dimensions, (in.)		
							A	B	E
66854-037018AIFTRG	3	Gold-Plated SST	1kV	Crimp	5	KF25	0.69	0.21	0.15
66854-067018BIFTRG	6	Gold-Plated SST	1kV	Crimp	5	KF40	0.69	0.21	0.26
66854-107018BIFTRG	10	Gold-Plated SST	1kV	Crimp	5	KF40	0.69	0.21	0.39
66854-197018BIFTRG	19	Gold-Plated SST	1kV	Crimp	5	KF40	0.69	0.21	0.52
66854-327018BIFTRG	32	Gold-Plated SST	1kV	Crimp	5	KF40	0.69	0.21	0.72
66854-417018CIFTRG	41	Gold-Plated SST	1kV	Crimp	5	KF50	0.69	0.21	0.84

CF Flange, Double-Ended

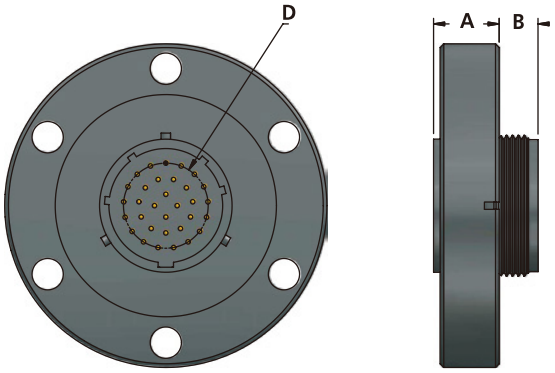

Part Number	#of Pins	Conductor Material	Voltage (DC)	Amps/Pin	Flange Size	Dimensions, (in.)		
						A	B	D
66856-037013IFDRG	3	Gold-Plated SST	1kV	5	CF40	0.69	0.39	0.15
66856-067013IFDRG	6	Gold-Plated SST	1kV	5	CF40	0.69	0.39	0.26
66856-107013IFDRG	10	Gold-Plated SST	1kV	5	CF40	0.69	0.39	0.39
66856-197013IFDRG	19	Gold-Plated SST	1kV	5	CF40	0.69	0.39	0.52
66856-327013IFDRG	32	Gold-Plated SST	1kV	5	CF40	0.69	0.39	0.72
66856-417013AIFDRG	41	Gold-Plated SST	1kV	5	CF50	0.69	0.39	0.84

KF Flange, Double-Ended

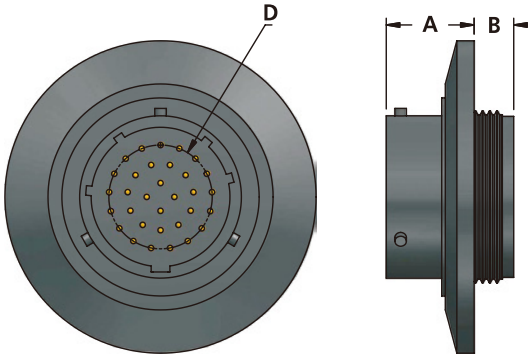

Part Number	#of Pins	Conductor Material	Voltage (DC)	Amps/Pin	Flange Size	Dimensions, (in.)		
						A	B	D
66856-037018AIFDRG	3	Gold-Plated SST	1kV	5	KF25	0.69	0.33	0.15
66856-067018BIFDRG	6	Gold-Plated SST	1kV	5	KF40	0.69	0.33	0.26
66856-107018BIFDRG	10	Gold-Plated SST	1kV	5	KF40	0.69	0.33	0.39
66856-197018BIFDRG	19	Gold-Plated SST	1kV	5	KF40	0.69	0.33	0.52
66856-327018BIFDRG	32	Gold-Plated SST	1kV	5	KF40	0.69	0.33	0.72
66856-417018CIFDRG	41	Gold-Plated SST	1kV	5	KF50	0.69	0.33	0.84

MPDT Sub D-Type

MPDT型多芯引线

- Available in different pin densities, from 9- to 50-pin designs
- Vacuum-side connectors are made of PEEK (polyetheretherketone)
- 304L stainless steel shell offers corrosion-resistance and strength

Specifications

Number of Pins;	9-50
Max. Voltage (DC):	500 VDC
Max. Current (per pin):	5A
Conductor:	Ni-Fe Alioy
Connector Insulator:	PEEK
Connector Type:	Push On
Vacuum Applicationt:	HV or UHV
Temperature Range:	Weld A dapter, CF: 77K to +300°C KF, O-Ring, NPT: -40°Ct +150°C Max. Ramp Rate: 25°C/minute Air-Side Connector: 0°C to +35°C Vac-Side Connector: 77K to +350°C

CF Flange

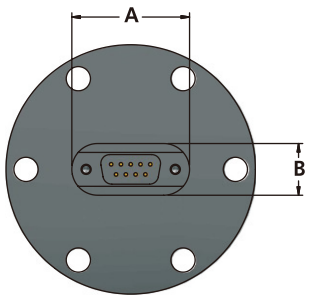



Part Number	Flange Size	#of Pin	Dimensions, (in.)	
			A	B
66858-091053IFDGG	CF40	9	33.00	14.50
66858-151056IFDGG	CF63	15	38.00	16.50
66858-251056IFDGG	CF63	25	55.00	19.00
66858-251056XIFDGG	CF63	50（2x25）	55.00	19.00
66858-371056AIFDGG	CF100	37	70.00	19.00
66858-501056AIFDGG	CF100	50	68.00	19.00

KF/ISO Flange

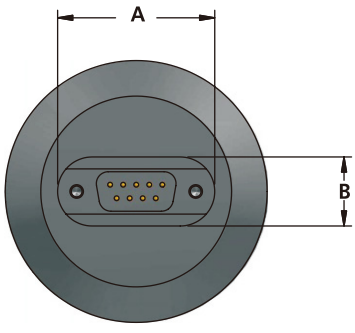

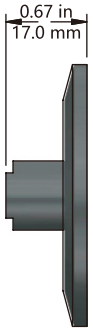

Part Number	Flange Size	#of Pin	Dimensions, (in.)	
			A	B
66858-091058BIFDGG	KF40	9	33.00	14.50
66858-151058CIFDGG	KF50	15	38.00	16.50
66858-251058DIFDGG	ISO63-K	25	55.00	19.00
66858-371058FIFDGG	ISO100-K	37	70.00	19.00
66858-501058FIFDGG	ISO100-K	50	68.00	19.00

Subminiature-C Multipin
微型C系列多针馈通

Multipin Heretic Feedthroughs:

- 9-pin configuration
- 250C high-temperature rated
- UHV compatible construction
- CF and QF flange mounts
- Kapton® insulated vacuum cables
- PEEK vacuum connectors
- Delrin® atmosphere connectors
- Custom versions available on request

Specifications

Vacuum Application:	UHV: $1x10^{-10}$ Torr HV: $1x10^{-8}$ Torr
Maximum Current:	5A@ 20°C
Maximum Voltage:	300V
Temperature:	Feedthrough: 250°C CF Flange: 450°C KF Flange: 150°C Connector, Air: 80°C Connector, Vacuum; 250°C Thermal Gradient: 25°C/ minute
Materials:	Shell: Stainless Steel Pins: Ni-Fe Alloy, Gold Plated Seal & Insulation: Glass-Ceramic Connector, Air: Delrin Connector, Vacuum: PEEK

CF Flange

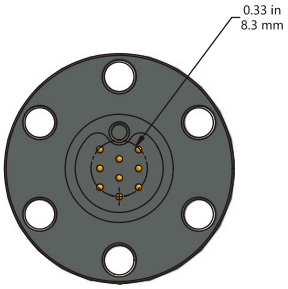

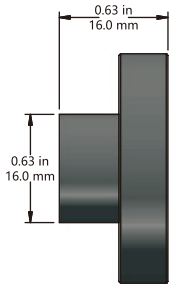

Part Number	Flange Size	#of Pin	Vac Side Configuration	Description
66861- 091052IFDJG	CF16	9	Gold-Plated Ni-Fe	9-Pin Feedthrough, 1.33" CF
66861- 091052KIFDJG	CF16	9	Gold-Plated Ni-Fe	9-Pin Feedthrough Kit, 1.33" CF*
66861- 091053IFDJG	CF40	9	Gold-Plated Ni-Fe	9-Pin Feedthrough, 2.75" CF
66861- 181053IFDJG	CF40	18（2x9-Pin）	Gold-Plated Ni-Fe	(2)x9-Pin Feedthrough, 2.75" CF

KF Flange

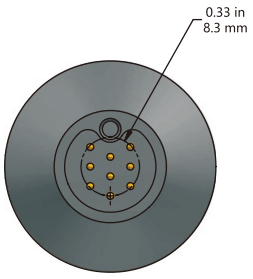

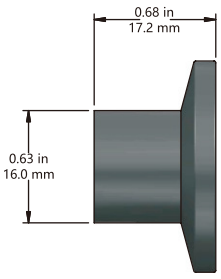

Part Number	Flange Size	#of Pin	Vac Side Configuration	Description
66861-091058IFDJG	KF16	9	Gold-Plated Ni-Fe	9-Pin Feedthrough, kF16
66861-091058KIFDJG	KF16	9	Gold-Plated Ni-Fe	9-Pin Feedthrough Kit, KF16*
66861-091058BIFDJG	KF40	9	Gold-Plated Ni-Fe	9-Pin Feedthrough,KF40
66861-181058BIFDJG	KF40	18（2x9-Pin）	Gold-Plated Ni-Fe	(2)x9-Pin Feedthrough,KF40

USB Feedthroughs
USB引线馈通

- Specifications Table
- Vacuum Application:HV or UHV
- Metal Seal Temperature Range:(Weld Adapter, CF)-269°C to 200°C
- Elastomer Seals Temperature Range (KF,O-Ring, NPT):-25°C to 200°C
- Grounded Shields Max. Voltage:30V RMS
- Leak Rate :≤ 2x10-10 CC/SEC He

CF Flange

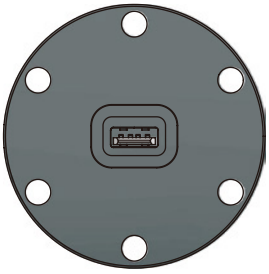

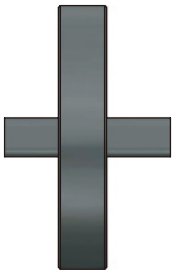

Part Number	Flange Size	Voltage(V)	Current(A)	Atm Side Termination	VAC Side Termin Tion
66835-0120121TFTKG	CF16	30	1	USB 2.0 Male	USB 2.0 Male
66835-012013ITFTKG	CF16	30	1	USB 2.0 Male	USB 2.0 Male
66835-012013FITFTKG	CF40	30	1	USB 2.0 Female	USB 2.0 Female
66835-012013FITFT3G	CF40	30	1	USB 3.0 Female	USB 3.0 Female

KF Flange

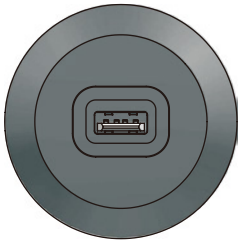

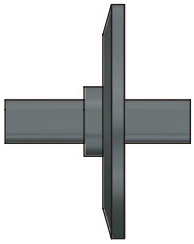

Part Number	Flange	Voltage(V)	Current(A)	ATM Side Termination	VAC Side Termin Tion
66835-012018BIFTKG	KF40	30	1	USB 2.0 Male	USB 2.0 Male
66835-012018BFIFTKG	KF40	30	1	USB 2.0 Female	USB 2.0 Female
66835-012018BFIFD3G	KF40	30	1	USB 3.0 Female	USB 3.0 Female

MS Multi-Pin
MS型多针馈通

- Work with MS circular connectors--solid-shell, straight-threaded connectors with polarized key ways
- Silver-plated contacts have pre-tinned solder pockets
- Single-Ended version includes air-side connector (vacuum-side crimp connectors are available as accessories)
- Double-Ended version includes both air- and vacuum-side connector

KF/ISO Flange， Double-Ended

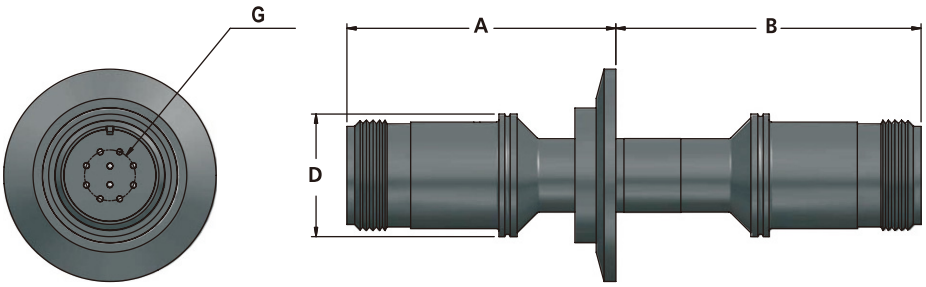

Part Number	#of Pins	Flange Size	Conductor Material	Voltage (DC)	Amps/Pin	Dimensions, (in.)			
						A	B	D	G
66864-045108BIFDAG	4	KF40	Alume®	700V	10	2.36	3.49	1.25	0.38
66864-045108CIFDAG	4	KF50	Alumel	700V	10	2.36	3.49	1.25	0.38
66864-065108BIFDAG	6	KF40	Alume	700V	10	2.36	3.49	1.25	0.44
66864-065108CIFDAG	6	KF50	Alumel	700V	10	2.36	3.49	1.25	0.44
66864-105108BIFDAG	10	KF40	Alume	700V	10	2.36	3.49	1.25	0.51
66864-105108CIFDAG	10	KF50	Alumel	700V	10	2.36	3.49	1.25	0.51
66864-205108DIFDAG	20	ISO63-K	Alumel	700V	10	2.78	3.50	1.75	1.03
66864-355108FI FDAG	35	ISO100-K	Alumel	700V	10	2.50	3.89	2.25	1.22

CF Flange， Double-Ended

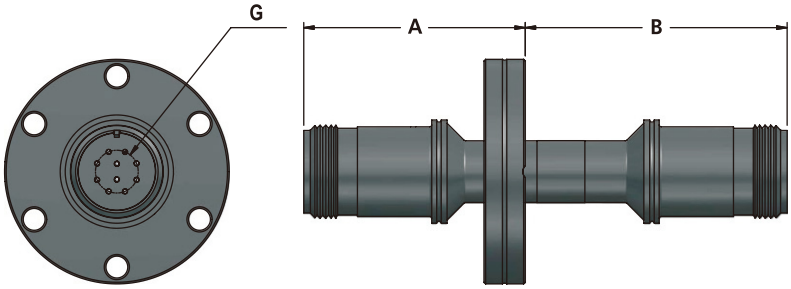

Part Number	#of Pins	Flange Size	Conductor Material	Voltage (DC)	Amps/Pin	Dimensions, (in.)		
						A	B	G
66864-045103IFDAG	4	CF40	Alume®	700V	10	2.36	3.49	0.38
66864-065103IFDAG	6	CF40	Alumel	700V	10	2.36	3.49	0.44
66864-105103IFDAG	10	CF40	Alume	700V	10	2.36	3.49	0.51
66864-205106IFDAG	20	CF63	Alumel	700V	10	2.78	3.50	1.03
66864-355106IFDAG	35	CF63	Alume	700V	10	2.50	3.89	1.22

CF Flange, Single-Ended

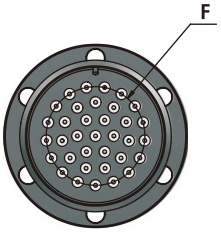

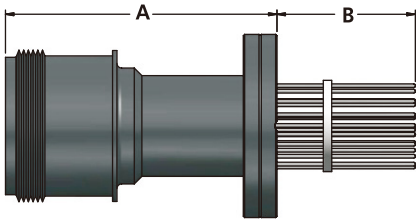

Part Number	#of Pins	Flange Size	Conductor Material	Voltage (DC)	Amps/Pin	Dimensions, (in.)		
						A	B	F
66863-045102IFTAG	4	CF16	Alume®	700V	10	2.85	2.69	0.38
66863-045103IFTAG	4	CF40	Alumel	700V	10	2.35	3.19	0.38
66863-065102IFTAG	6	CF16	Alume	700V	10	2.85	2.69	0.44
66863-065103IFTAG	6	CF40	Alumel	700V	10	2.35	3.19	0.44
66863-104102IFTAG	10	CF16	Molybdenum	700V	10	2.85	2.69	0.51
66863-104103IFTAG	10	CF40	Molybdenum	700V	10	2.35	3.19	0.51
66863-105102IFTAG	10	CF16	Alumel	700V	10	2.85	2.69	0.51
66863-105103IFTAG	10	CF40	Alumel	700V	10	2.35	3.19	0.51
66863-204103IFTAG	20	CF40	Molybdenum	700V	10	2.53	3.50	1.03
66863-205103IFTAG	20	CF40	Alumel	700V	10	2.53	3.50	1.03
66863-355103IFTAG	35	CF40	Alume	700V	10	3.98	2.10	1.22
66863-355106IFTAG	35	CF63	Alumel	700V	10	3.98	2.10	1.22

KF Flange, Single-Ended

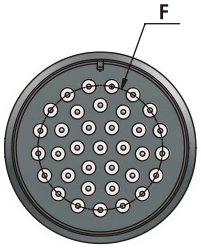

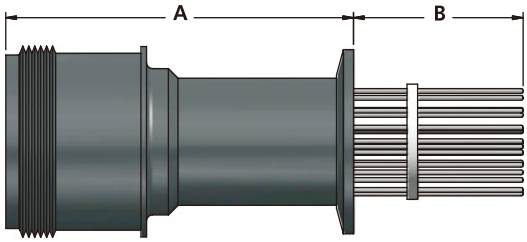

Part Number	#of Pins	Flange Size	Conductor Material	Voltage (DC)	Amps/Pin	Dimensions, (in.)		
						A	B	F
66863-045108IFTAG	4	KF16	Alume®	700V	10	2.35	3.19	0.38
66863-045108BIFTAG	4	KF40	Alumel	700V	10	2.35	3.19	0.38
66863-065108IFTAG	6	KF16	Alume	700V	10	2.35	3.19	0.44
66863-065108AIFTAG	6	KF25	Alumel	700V	10	2.35	3.19	0.44
66863-065108BIFTAG	6	KF40	Alumel	700V	10	2.35	3.19	0.44
66863-104108IFTAG	10	KF16	Molybdenum	700V	10	2.35	3.19	0.51
66863-104108AIFTAG	10	KF25	Molybdenum	700V	10	2.35	3.19	0.51
66863-104108BIFTAG	10	KF40	Molybdenum	700V	10	2.35	3.19	0.51
66863-104108CIFTAG	10	KF50	Molybdenum	700V	10	2.35	3.19	0.51
66863-105108IFTAG	10	KF16	Alumel	700V	10	2.35	3.19	0.51
66863-105108A1FTAG	10	KF25	Alumel	700V	10	2.35	3.19	0.51
66863-105108B1FTAG	10	KF40	Alumel	700V	10	2.35	3.19	0.51
66863-105108CIFTAG	10	KF50	Alumel	700V	10	2.35	3.19	0.51
66863-204108B1FTAG	20	KF40	Molybdenum	700V	10	2.53	3.50	1.03
66863-204108CIFTAG	20	KF50	Molybdenum	700V	10	2.53	3.50	1.03
66863-205108BIFTAG	20	KF40	Alumel	700V	10	2.53	3.50	1.03
66863-205108CIFTAG	20	KF50	Alumel	700V	10	2.53	3.50	1.03
66863-355108BIFTAG	35	KF40	Alume	700V	10	3.98	2.10	6.33
66863-355108CIFTAG	35	KF50	Alumel	700V	10	3.98	2.10	6.33

MPT Multi-Pin
MPT型多针馈通

- Available with 3, 5, or 7 nicke-clad molybdenum pins, and weldable terinations, CF flanges, or KF flanges
- Includes one air-side connector (vacuum-side crimp connectors are available as accessories)

Number of Pins: 3–7 Max.
Voltage (DC): 500 VDC Max.
Current (per Pin): 3.5A
Conductor: Molybdenum

F/T Insulator: Alumina
Connector Insulator: Plastic
Connector Type: Screw Thread
Vacuum Application: HV or UHV

Temperature Range:
Weld Adapter, CF: Ambient to +450° C
KF, O-Ring, NPT: -40° C to +150° C
Max. Ramp Rate: 25° C/minute
Air-Side Connector: 0° C to +35° C

CF Flange, Single-Ended

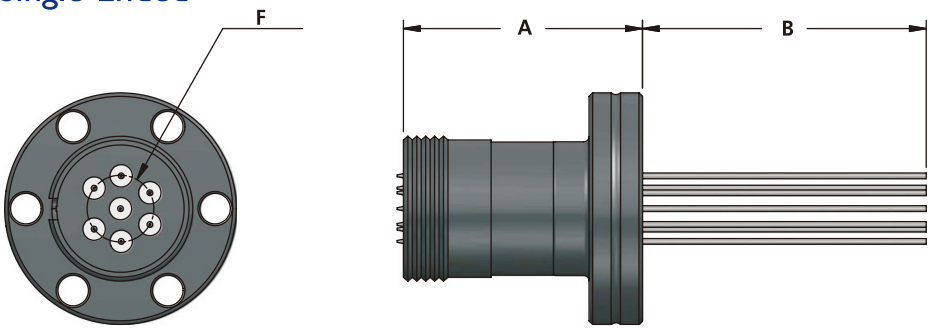

Part Number	#of Pins	Flange Size	Vac. Side	Voltage (DC)	Amps/Pin	Dimensions, (in.)		
						A	B	F
66866-034032IFTAG	3	CF16	Molybdenum	500V	3.5	0.97	2.01	0.25
66866-034033IFTAG	3	CF40	Molybdenum	500V	3.5	0.97	2.01	0.25
66866-054032IFTAG	5	CF16	Molybdenum	500V	3.5	1.34	1.58	0.38
66866-054033IFTAG	5	CF40	Molybdenum	500V	3.5	0.84	2.08	0.38
66866-074032IFTAG	7	CF16	Molybdenum	500V	3.5	1.34	1.58	0.38
66866-074033IFTAG	7	CF40	Molybdenum	500V	3.5	0.84	2.08	0.38

KF Flange, Single-Ended

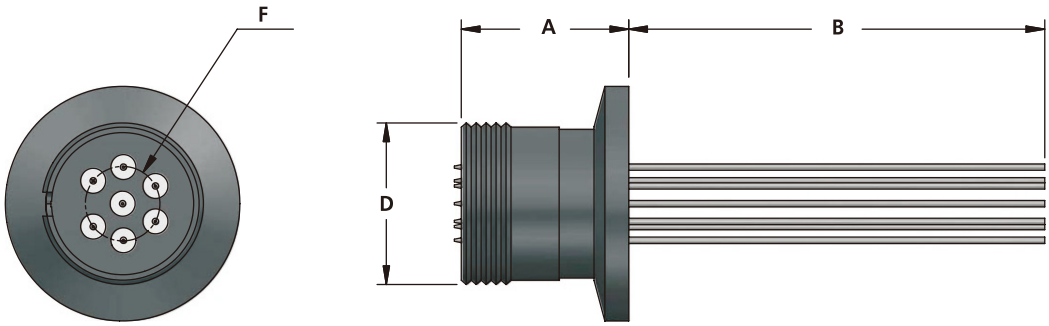

Part Number	#of Pins	Flange Size	Vac. Side	Voltage (DC)	Amps/Pin	Dimensions, (in.)		
						A	B	F
66886-034038IFTAG	3	KF16	Molybdenum	500V	3.5	0.97	2.01	0.25
66886-034038BIFTAG	3	KF40	Molybdenum	500V	3.5	0.97	2.01	0.25
66886-054038IFTAG	5	KF16	Molybdenum	500V	3.5	0.84	2.08	0.38
66886-054038AIFTAG	5	KF25	Molybdenum	500V	3.5	0.84	2.08	0.38
66886-054038BIFTAG	5	KF40	Molybdenum	500V	3.5	0.84	2.08	0.38
66886-054038CIFTAG	3	KF50	Molybdenum	500V	3.5	0.84	2.08	0.38
66886-074038IFTAG	7	KF16	Molybdenum	500V	3.5	0.84	2.08	0.38
66886-074038AIFTAG	7	KF25	Molybdenum	500V	3.5	0.84	2.08	0.38
66886-074038BIFTAG	7	KF40	Molybdenum	500V	3.5	0.84	2.08	0.38
66886-074038CIFTAG	7	KF50	Molybdenum	500V	3.5	0.84	2.08	0.38

Type C Mini Plug

C 型热电偶引线

- Feature positive wires made of Tungsten/5% Rhenium and negative wires of Tungsten/26% Rhenium
- Temperature range between 0°C and 2,315°C
- Can be used with refactory-metal thermocouples
- Rated for use in high and ultrahigh vacuum applications
- Include air-side connectors
- Vacuum side leads terminate in thermocouple lugs, which include a stainless steel nut and screw to facilitate thermocouple hookup

CF Flange

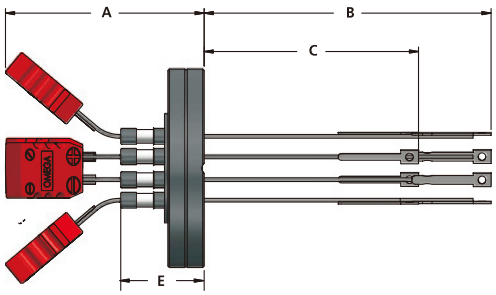

Part Number	Air Side	Vac. Side	Flange Size	T/C Pairs	Dimensions, (in.)			
					A	B	C	E
66868-00002TFT1CY	Miniature Plug	Nut/Bolt	CF16	1	1.81	4.00	3.00	1.08
66868-00003TFT1CY	Miniature Plug	Nut/Bolt	CF40	1	1.31	4.50	3.50	0.58
66868-00002TFT2CY	Miniature Plug	Nut/Bolt	CF16	2	2.61	4.00	3.00	1.88
66868-00003TFT2CY	Miniature Plug	Nut/Bolt	CF40	2	2.11	4.50	3.50	1.38
66868-00002TFT3CY	Miniature Plug	Nut/Bolt	CF16	3	2.76	4.00	3.00	2.08
66868-00003TFT3CY	Miniature Plug	Nut/Bolt	CF40	3	2.26	4.50	3.50	1.58
66868-00003TFT4CY	Miniature Plug	Nut/Bolt	CF40	4	2.00	4.00	3.00	1.16
66868-00003TFT5CY	Miniature Plug	Nut/Bolt	CF40	5	2.50	4.00	3.00	1.16

KF Flange

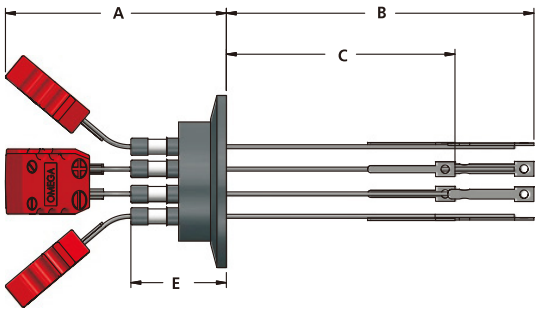

Part Number	Air Side	Vac. Side	Flange Size	T/C Pairs	Dimensions, (in.)			
					A	B	C	E
66868-00008TFT1CY	Miniature Plug	Nut/Bolt	KF16	1	1.31	4.50	3.50	0.58
68868-00008ATFT1CY	Miniature Plug	Nut/Bolt	KF25	1	1.31	4.50	3.50	0.58
66868-00008BTFT1CY	Miniature Plug	Nut/Bolt	KF40	1	1.31	4.50	3.50	0.58
66868-00008TFT2CY	Miniature Plug	Nut/Bolt	KF16	2	2.11	4.50	3.50	1.38
66868-00008ATFT2CY	Miniature Plug	Nut/Bolt	KF25	2	2.11	4.00	3.50	1.38
66868-00008BTFT2CY	Miniature Plug	Nut/Bolt	KF40	2	2.11	4.50	3.50	1.38
66868-00008TFT3CY	Miniature Plug	Nut/Bolt	KF16	3	2.26	4.50	3.50	1.58
66868-00008BTFT3CY	Miniature Plug	Nut/Bolt	KF40	3	2.26	4.50	3.50	1.58
66868-00008CTFT3CY	Miniature Plug	Nut/Bolt	KF50	3	2.26	4.50	3.50	1.58
66868-00008BTFT4CY	Miniature Plug	Nut/Bolt	KF40	4	2.00	4.00	3.00	1.16
66868-00008BTFT5CY	Miniature Plug	Nut/Bolt	KF40	5	2.50	4.00	3.00	1.16

Type C Mini Plug Plus Power

E型热电偶+电源引线

- Nickel or copper
- Rated to 5,000 volts and 30 amps
- Designed for use in high vacuum and UHV applications requiring both power and temperature measurements
- Minimize the number of dedicated vacuum ports ultimately required in a vacuum system
- Feature positive wires made of Tungsten/5% Rhenium and negative wires of Tungsten/26% Rhenium
- Temperature range between 0°C and 2,320°C
- Can be used with refactory-metal thermocouples
- Rated for use in high vacuum and UHV applications
- All assemblies are supplied with miniature air-side thermocouple connectors and vacuum-side thermocouple lugs with a #3-48 screw and nut

CF Flange

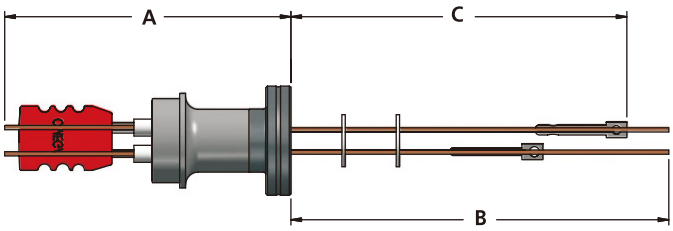

Part Number	Air Side	Vac. Side	Flange Size	T/C Pairs	Power Pins	Amps/ Pin	Dimensions, (in.)		
							A	B	C
66870-2C152TFT1CY	Miniature Plug	Nut/Bolt	CF16	1	(2) 0.050" Cu	15	2.50	4.00	3.00
66870-2C153TFT1CY	Miniature Plug	Nut/Bolt	CF40	1	(2) 0.050" Cu	15	2.00	4.50	3.50
66870-2C302TFT1CY	Miniature Plug	Nut/Bolt	CF16	1	(2) 0.094" Cu	30	2.85	3.86	2.86
66870-2C303TFT1CY	Miniature Plug	Nut/Bolt	CF40	1	(2) 0.094" Cu	30	2.35	4.36	3.36
66870-2N052TFT1CY	Miniature Plug	Nut/Bolt	CF16	1	(2) 0.050" Ni	5	2.50	4.00	3.00
66870-2N053TFT1CY	Miniature Plug	Nut/Bolt	CF40	1	(2) 0.050" Ni	5	2.00	4.50	3.50
66870-2N152TFT1CY	Miniature Plug	Nut/Bolt	CF16	1	(2) 0.094" Ni	15	2.85	3.86	2.86
66870-2N153TFT1CY	Miniature Plug	Nut/Bolt	CF40	1	(2) 0.094" Ni	15	2.35	4.36	3.36

KF Flange

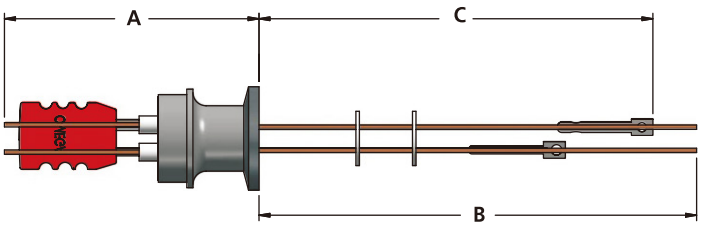

Part Number	Air Side	Vac. Side	Flange Size	T/C Pairs	Power Pins	Amps/ Pin	Dimensions, (in.)		
							A	B	C
66870-2C158TFT1CY	Miniature Plug	Nut/Bolt	KF16	1	(2) 0.050" Cu	15	2.00	4.50	3.50
66870-2C158BTFT1CY	Miniature Plug	Nut/Bolt	KF40	1	(2) 0.050" Cu	15	2.00	4.50	3.50
66870-2C308TFT1CY	Miniature Plug	Nut/Bolt	KF16	1	(2) 0.094" Cu	30	2.35	4.36	3.36
66870-2C308BTFT1CY	Miniature Plug	Nut/Bolt	KF40	1	(2) 0.094" Cu	30	2.35	4.36	3.36
66870-2N058TFT1CY	Miniature Plug	Nut/Bolt	KF16	1	(2) 0.050" Ni	5	2.00	4.50	3.50
66870-2N058BTFT1CY	Miniature Plug	Nut/Bolt	KF40	1	(2) 0.050" Ni	5	2.00	4.50	3.50
66870-2N158TFT1CY	Miniature Plug	Nut/Bolt	KF16	1	(2) 0.094" Ni	15	2.35	4.36	3.36
66870-2N158BTFT1CY	Miniature Plug	Nut/Bolt	KF40	1	(2) 0.094" Ni	15	2.35	4.36	3.36

Type E Mini Plug

E型热电偶引线

- Available in 1, 2, 3, 4, and 5 pairs
- Positive wires are made of Chromel® and the negative wires are made of Constantan
- Temperature range of -200°C to +900°C

CF Flange, Single-Ended

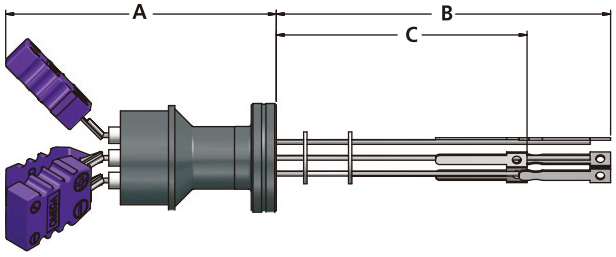

Part Number	Air Side	Vac. Side	Flange Size	T/C Pairs	Dimensions, (in.)			
					A	B	C	D
66873-00002TFT1EY	Miniature Plug	Nut/Bolt	CF16	1	1.81	4.00	3.00	1.33
66873-00003TFT1EY	Miniature Plug	Nut/Bolt	CF40	1	1.31	4.50	3.50	2.75
66873-00002TFT2EY	Miniature Plug	Nut/Bolt	CF16	2	2.61	4.00	3.00	1.33
66873-00003TFT2EY	Miniature Plug	Nut/Bolt	CF40	2	2.11	4.50	3.50	2.75
66873-00002TFT3EY	Miniature Plug	Nut/Bolt	CF16	3	2.76	4.00	3.00	1.33
66873-00003TFT3EY	Miniature Plug	Nut/Bolt	CF40	3	2.26	4.50	3.50	2.75
66873-00003TFT4EY	Miniature Plug	Nut/Bolt	CF40	4	2.00	4.00	3.00	2.75
66873-00003TFT5EY	Miniature Plug	Nut/Bolt	CF40	5	2.50	4.00	3.00	2.75

KF Flange, Single-Ended

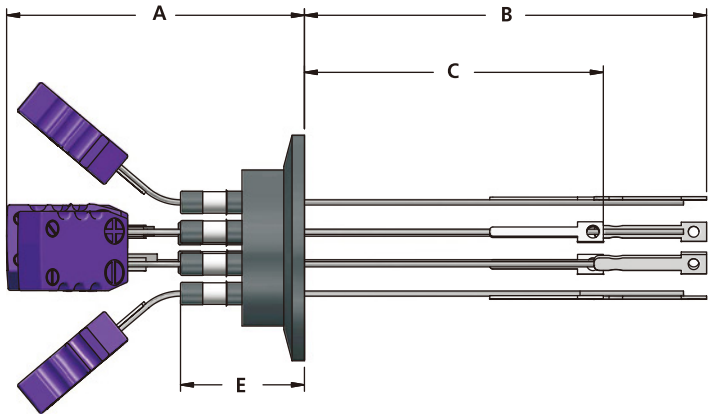

Part Number	Air Side	Vac. Side	Flange Size	T/C Pairs	Dimensions, (in.)			
					A	B	C	E
66873-00008TFT1EY	Miniature Plug	Nut/Bolt	KF16	1	1.31	4.50	3.50	0.58
66873-00008BTFT1EY	Miniature Plug	Nut/Bolt	KF40	1	1.31	4.50	3.50	0.58
66873-00008TFT2EY	Miniature Plug	Nut/Bolt	KF16	2	2.11	4.50	3.50	1.38
66873-00008BTFT2EY	Miniature Plug	Nut/Bolt	KF40	2	2.11	4.50	3.50	1.38
66873-00008TFT3EY	Miniature Plug	Nut/Bolt	KF16	3	2.26	4.50	3.50	1.58
66873-00008BTFT3EY	Miniature Plug	Nut/Bolt	KF40	3	2.26	4.50	3.50	1.58
66873-00008BTFT4EY	Miniature Plug	Nut/Bolt	KF40	4	2.00	4.00	3.00	1.16
66873-00008BTFT5EY	Miniature Plug	Nut/Bolt	KF40	5	2.50	4.00	3.00	1.16

Type E Mini Plug Plus Power
E型热电偶+电源引线

Type E Thermocouple/Power Feedthroughs:

- Two nickel or copper power conductors
- Rated to 5,000 volts and 30 amps
- Use in high vacuum and UHV applications requiring both power and temperature measurements
- Minimizes the number of dedicated vacuum ports required in vacuum systems

Type E Feedthroughs:

- Constructed of vacuum-grade materials, including OFHC copper or nickel conductor pins, high-purity alumina ceramic insulation, 304 stainless steel mounts, and vacuum-tube-grade braze alloys
- Positive wires made of Chromel® and negative wires made of Constantan
- Temperature range of -200° C to +900° C
- Assemblies supplied with miniature air-side thermocouple connectors and vacuum-side thermocouple lugs with a #3–48 screw and nut

NOTE: Power leads are not supplied with connectors. Must be purchased separately

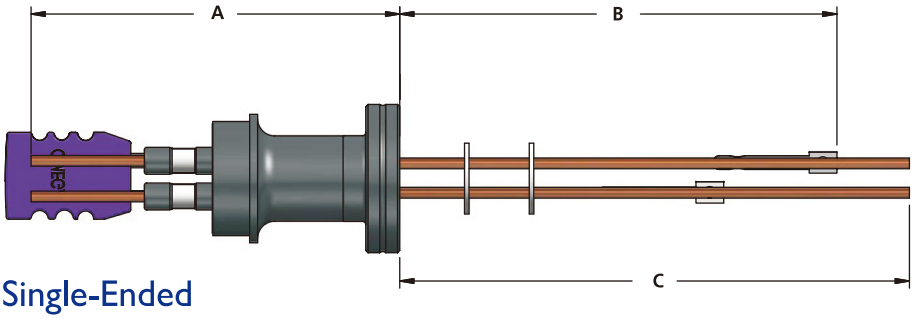

CF Flanged, Single-Ended

Part Number	Air Side	Vac. Side	Flange Size	T/C Pairs	Power Pins	Amps/ Pin	Dimensions, (in.)		
							A	B	C
66875-2G152TFT1EY	Miniature Plug	Nut/Bolt	CF16	1	(2) 0.050" Cu	15	2.64	4.00	3.00
66875-2C153TFT1EY	Miniature Plug	Nut/Bolt	CF40	1	(2) 0.050" Cu	15	2.14	4.50	3.50
66875-2C302TFT1EY	Miniature Plug	Nut/Bolt	CF16	1	(2) 0.094" Cu	30	2.85	4.00	3.00
66875-2C303TFT1EY	Miniature Plug	Nut/Bolt	CF40	1	(2) 0.094" Cu	30	2.35	4.50	3.50
66875-2N052TFT1EY	Miniature Plug	Nut/Bolt	CF16	1	(2) 0.050" Ni	5	2.64	4.00	3.00
66875-2N053TFT1EY	Miniature Plug	Nut/Bolt	CF40	1	(2) 0.050" Ni	5	2.14	4.50	3.50
66875-2N152TFT1EY	Miniature Plug	Nut/Bolt	CF16	1	(2) 0.092" Ni	15	2.85	4.00	3.00
66875-2N153TFT1EY	Miniature Plug	Nut/Bolt	CF40	1	(2) 0.092" Ni	15	2.35	4.50	3.50

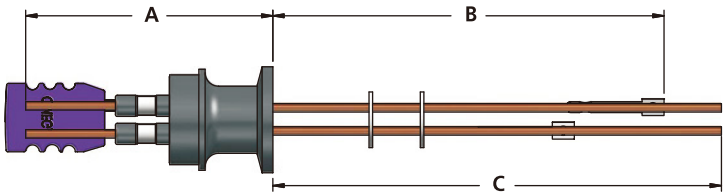

KF Flange, Single-Ended

Part Number	Air Side	Vac. Side	Flange Size	T/C Pairs	Shield	Amps/ Pin	Dimensions, (in.)		
							A	B	C
66875-2C158TFT1EY	Miniature Plug	Nut/Bolt	KF16	1	(2) 0.050" Cu	15	2.14	4.50	3.50
66875-2C158BTFT1EY	Miniature Plug	Nut/Bolt	KF40	1	(2) 0.050" Cu	15	2.14	4.50	3.50
66875-2C308TFT1EY	Miniature Plug	Nut/Bolt	KF16	1	(2) 0.094" Cu	30	2.35	4.36	3.36
66875-2C308BTFT1EY	Miniature Plug	Nut/Bolt	KF40	1	(2) 0.094" Cu	30	2.35	4.36	3.36
66875-2N058TFT1EY	Miniature Plug	Nut/Bolt	KF16	1	(2) 0.050" Ni	5	2.14	4.50	3.50
66875-2N058BTFT1EY	Miniature Plug	Nut/Bolt	KF40	1	(2) 0.050" Ni	5	2.14	4.50	3.50
66875-2N158TFT1EY	Miniature Plug	Nut/Bolt	KF16	1	(2) 0.092" Ni	15	2.35	4.36	3.36
66875-2N158BTFT1EY	Miniature Plug	Nut/Bolt	KF40	1	(2) 0.092" Ni	15	2.35	4.36	3.36

Type E Push-On
E型热电偶引推入式插头

Type E T/C Screw-On

- Individual push-on connectors
- Available in 2, 3, 5, and 10 pairs
- Positive wires are made of Chromel® and the negative wires are made of Constantan
- Temperature range of -200°C to +900°C

CF Flange, Single-Ended

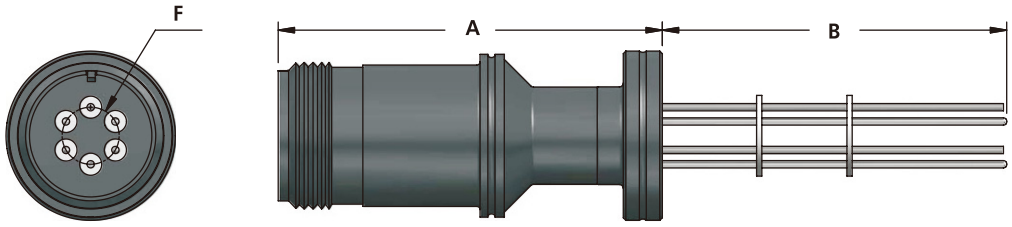

Part Number	Air Side	Vac. Side	Flange Size	T/C Pairs	Dimensions, (in.)		
					A	B	F
66876-00002TFT2EA	Mil-Spec Plug	Pins	CF16	2	2.85	2.70	0.38
66876-00003TFT2EA	Mil-Spec Plug	Pins	CF40	2	2.35	3.20	0.38
66876-00002TFT3EA	Mil-Spec Plug	Pins	CF16	3	2.85	2.70	0.44
66876-00003TFT3EA	Mil-Spec Plug	Pins	CF40	3	2.35	3.20	0.44
66876-00002TFT5EA	Mil-Spec Plug	Pins	CF16	5	2.85	2.70	0.51
66876-00003TFT5EA	Mil-Spec Plug	Pins	CF40	5	2.35	3.20	0.51
66876-00003TFTVEA	Mil-Spec Plug	Pins	CF40	10	2.53	3.50	1.03

KF Flange, Single-Ended

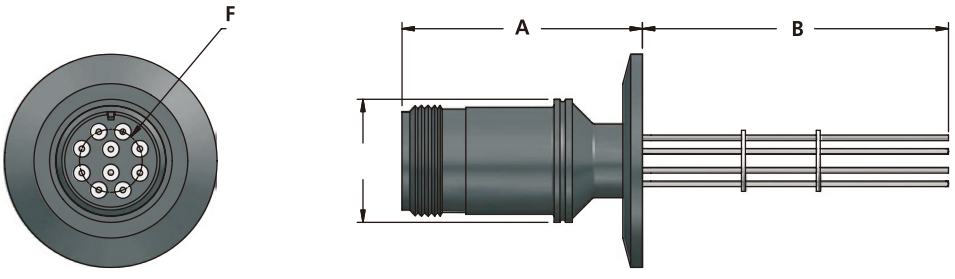

Pare Number	Air Side	Vac. Side	Flange Size	T/C Pairs	Dimensions, (in.)		
					A	B	F
66876-00008TFT2EA	Mil-Spec Plug	Pins	KF16	2	2.35	2.20	0.38
66876-00008BTFT2EA	Mil-Spec Plug	Pins	KF40	2	2.35	3.20	0.38
66876-00008TFT3EA	Mil-Spec Plug	Pins	KF16	3	2.35	2.20	0.44
66876-00008BTFT3EA	Mil-Spec Plug	Pins	KF40	3	2.35	3.20	0.44
66876-00008TFT5EA	Mil-Spec Plug	Pins	KF16	5	2.35	2.20	0.51
66876-00008BTFT5EA	Mil-Spec Plug	Pins	KF40	5	2.35	3.20	0.51
66876-00008BTFTVEA	Mil-Spec Plug	Pins	KF40	10	2.53	3.50	1.03

Type J Mini Plug
J型热电偶引线

- Available in 1, 2, 3, 4, and 5 pairs
- Temperature range from 0°C to 750°C
- Include air-side connectors
- Designed for use in high vacuum and UHV applications
- Feature positive wires made of iron and negative wires of Constantan
- Vacuum-side leads terminate in thermocouple lugs, which include a stainless steel nut and screw to facilitate thermocouple hookup

KF Flange， Single-Ended

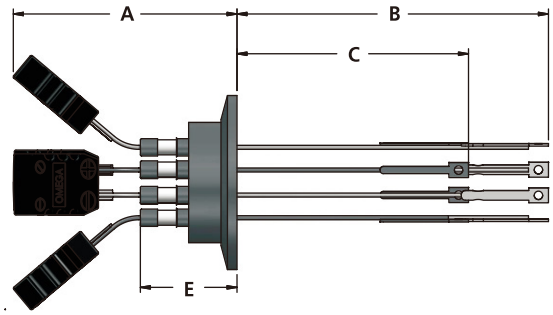

Part Number	Air Side	Vac. Side	Flange Size	T/C Pairs	Dimensions, (in.)			
					A	B	C	E
66878-00008TFT1JY	Miniature Plug	Nut/Bolt	KF16	1	1.31	4.50	3.50	0.58
66878-00008ATFT1JY	Miniature Plug	Nut/Bolt	KF25	1	1.31	4.50	3.50	0.58
66878-00008BTFT1JY	Miniature Plug	Nut/Bolt	KF40	1	1.31	4.50	3.50	0.58
66878-00008TFT2JY	Miniature Plug	Nut/Bolt	KF16	2	2.11	4.50	3.50	1.38
66878-00008ATFT2JY	Miniature Plug	Nut/Bolt	KF25	2	2.11	4.50	3.50	1.38
66878-00008BTFT2JY	Miniature Plug	Nut/Bolt	KF40	2	2.11	4.50	3.50	1.38
66878-00008TFT3JY	Miniature Plug	Nut/Bolt	KF16	3	2.26	4.50	3.50	1.58
66878-00008BTFT3JY	Miniature Plug	Nut/Bolt	KF40	3	2.26	4.50	3.50	1.58
66878-00008BTFT4JY	Miniature Plug	Nut/Bolt	KF40	4	2.00	4.00	3.00	1.16
66878-00008BTFT5JY	Miniature Plug	Nut/Bolt	KF40	5	2.50	4.00	3.00	1.16

CF Flange， Single-Ended

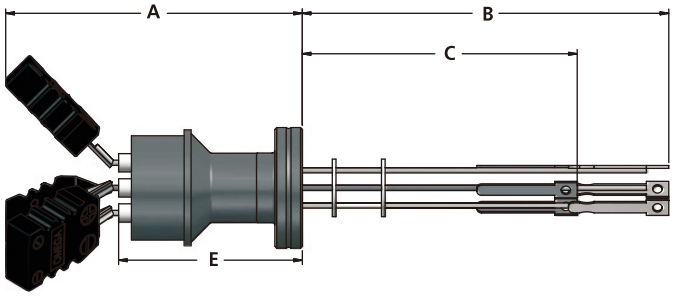

Part Number	Air Side	Vac. Side	Flange Size	T/C Pairs	Dimensions, (in.)			
					A	B	C	E
66878-00002TFT1JY	Miniature Plug	Nut/Bolt	CF16	1	1.81	4.00	3.00	1.08
66878-00003TFT1JY	Miniature Plug	Nut/Bolt	CF40	1	1.31	4.50	3.50	0.58
66878-00002TFT2JY	Miniature Plug	Nut/Bolt	CF16	2	2.61	4.00	3.00	1.88
66878-00003TFT2JY	Miniature Plug	Nut/Bolt	CF40	2	2.11	4.50	3.50	1.38
66878-00002TFT3JY	Miniature Plug	Nut/Bolt	CF16	3	2.76	4.00	3.00	2.08
66878-00003TFT3JY	Miniature Plug	Nut/Bolt	CF40	3	2.26	4.50	3.50	1.58
66878-00003TFT4JY	Miniature Plug	Nut/Bolt	CF16	4	2.00	4.00	3.00	1.16
66878-00003TFT5JY	Miniature Plug	Nut/Bolt	CF40	5	2.50	4.00	3.00	1.16

Type J Mil-Spec Plug
J型热电偶Mil-Spec标准插头

CF Flange, Single-Ended

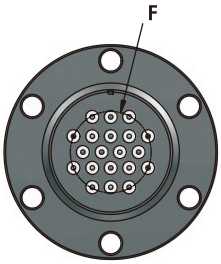

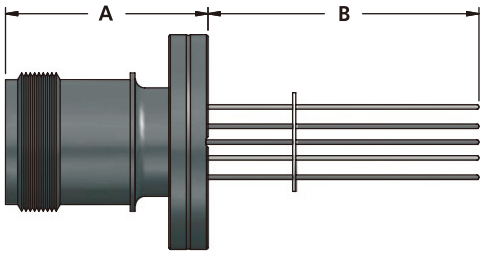

Part Number	Air Side	Vac. Side	Flange Size	T/C Pairs	Dimensions, (in.)		
					A	B	F
66880-00002TFT2JA	Mil-Spec Plug	Pins	CF16	2	2.85	2.70	0.38
66880-00003TFT2JA	Mil-Spec Plug	Pins	CF40	2	2.35	3.20	0.38
66880-00002TFT3JA	Mil-Spec Plug	Pins	CF16	3	2.85	2.70	0.44
66880-00003TFT3JA	Mil-Spec Plug	Pins	CF40	3	2.35	3.20	0.44
66880-00002TFT5JA	Mil-Spec Plug	Pins	CF16	5	2.85	2.70	0.51
66880-00003TFT5JA	Mil-Spec Plug	Pins	CF40	5	2.35	3.20	0.51
66880-00003TFTVJA	Mil-Spec Plug	Pins	CF40	10	2.53	3.50	1.03

KF Flange, Single-Ended

- Available in 1, 2, 3, 5, and 10 pairs

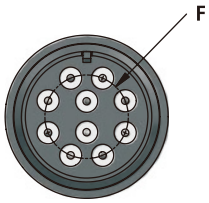

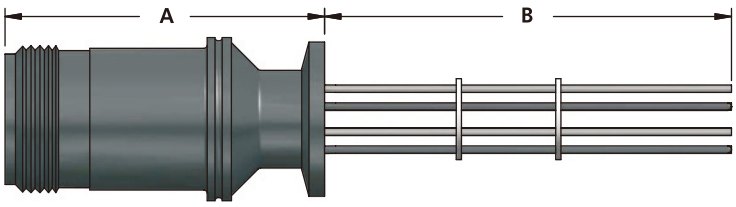

Part Number	Air Side	Vac. Side	Flange Size	T/C Pairs	Dimensions, (in.)		
					A	B	F
66880-00008TFT2JA	Mil-Spec Plug	Pins	KF16	2	2.35	3.20	0.38
66880-00008BTFT2JA	Mil-Spec Plug	Pins	KF40	2	2.35	3.20	0.38
66880-00008TFT3JA	Mil-Spec Plug	Pins	KF16	3	2.35	3.20	0.44
66880-00008BTFT3JA	Mil-Spec Plug	Pins	KF40	3	2.35	3.20	0.44
66880-00008TFT5JA	Mil-Spec Plug	Pins	KF16	5	2.35	3.20	0.51
66880-000088TFT5JA	Mil-Spec Plug	Pins	KF40	5	2.35	3.20	0.51
66880-00008BTFTVJA	Mil-Spec Plug	Pins	KF40	10	2.53	3.50	1.03

Type J Mil-Spec Plug
K型热电偶+电源引线

CF Flange， Double-Ended

◆ Available in 1, 2, 3, 5, and 10 pairs

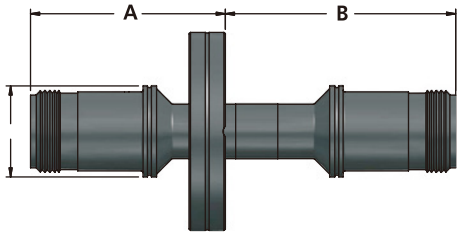

Part Number	Air Side	Vac. Side	Flange Size	T/C Pairs	Dimensions, (in.)	
					A	B
66886-00003TFD2JA	Mil-Spec Plug	Mil-Spec Plug	CF40	2	2.34	3.69
66886-00003TFD3JA	Mil-Spec Plug	Mil-Spec Plug	CF40	3	2.34	3.69
66886-00003TFD5JA	Mil-Spec Plug	Mil-Spec Plug	CF40	5	2.34	3.69
66886-00006TFDVJA	Mil-Spec Plug	Mil-Spec Plug	CF63	10	2.78	3.50

KF Flange， Double-Ended

◆ Available in 1, 2, 3, 5, and 10 pairs

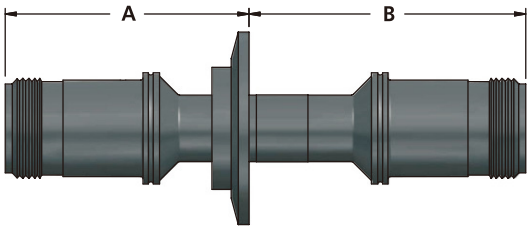

Part Number	Air Side	Vac. Side	Flange Size	T/C Pairs	Dimensions, (in.)	
					A	B
66886-00008BTFD2JA	Mil-Spec Plug	Mil-Spec Plug	KF40	2	2.34	3.69
66886-00008CTFD2JA	Mil-Spec Plug	Mil-Spec Plug	KF50	2	2.34	3.69
66886-00008BTFD3JA	Mil-Spec Plug	Mil-Spec Plug	KF40	3	2.34	3.69
66886-00008CTFD3JA	Mil-Spec Plug	Mil-Spec Plug	KF50	3	2.34	3.69
66886-000088TFD5JA	Mil-Spec Plug	Mil-Spec Plug	KF40	5	2.34	3.69
66886-00008CTFD5JA	Mil-Spec Plug	Mil-Spec Plug	KF50	5	2.34	3.69
66886-00008DTFDVJA	Mil-Spec Plug	Mil-Spec Plug	ISO63	10	2.78	3.50

Type J Mini Plug Plus Power

J型热电偶+电源引线

- Nickel or copper power conductors
- Temperature range from 0°C to 750°C.
- Use in high vacuum and UHV applications requiring both power and temperature. measurerents
- Rated to 5,000 volts and 30 amps
- Feature positive wires made of iron and negative wires made of Constantane

NOTE: Power leads are not supplied with connecfors. Must be purchased separately

CF Flange， Single-Ended

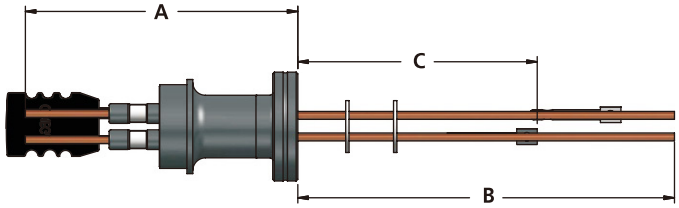

Part Number	Air Side	Vac. Side	Flange Size	T/C Pairs	Amps/ Pin	Dimensions, (in.)		
						A	B	C
66884-2C152TFT1JY	Miniature Plug	Nut/Bolt	CF16	1	15	2.50	4.00	3.00
66884-2C153TFT1JY	Miniature Plug	Nut/Bolt	CF40	1	15	2.00	4.50	3.50
66884-2C302TFT1JY	Miniature Plug	Nut/Bolt	CF16	1	30	2.50	4.00	3.00
66884-2C303TFT1JY	Miniature Plug	Nut/Bolt	CF40	1	30	2.00	4.50	3.50
66884-2N052TFT1JY	Miniature Plug	Nut/Bolt	CF16	1	5	2.50	4.00	3.00
66884-2N053TFT1JY	Miniature Plug	Nut/Bolt	CF40	1	5	2.00	4.50	3.50
66884-2N152TFT1JY	Miniature Plug	Nut/Bolt	CF16	1	15	2.85	4.86	3.86
66884-2N153TFT1JY	Miniature Plug	Nut/Bolt	CF40	1	15	2.35	4.36	3.36

KF Flange， Single-Ended

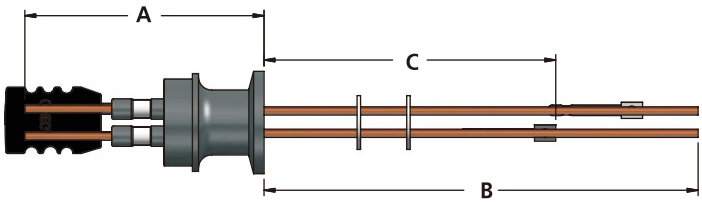

Part Number	Air Side	Vac. Side	Flange Size	Pairs	Amps/ Pin	Dimensions, (in.)		
						A	B	C
66884-2C158TFT1JY	Miniature Plug	Nut/Bolt	KF16	1	15	2.00	4.50	3.50
66884-2C158ATFT1JY	Miniature Plug	Nut/Bolt	KF25	1	15	2.00	4.50	3.50
66884-2C158BTFT1JY	Miniature Plug	Nut/Bolt	KF40	1	15	2.00	4.50	3.50
66884-2C308TFT1JY	Miniature Plug	Nut/Bolt	KF16	1	30	2.00	4.50	3.50
66884-2C308BTFT1JY	Miniature Plug	Nut/Bolt	KF40	1	30	2.00	4.50	3.50
66884-2N058TFT1JY	Miniature Plug	Nut/Bolt	KF16	1	5	2.00	4.50	3.50
66884-2N058BTFT1JY	Miniature Plug	Nut/Bolt	KF40	1	5	2.00	4.50	3.50
66884-2N158TFT1JY	Miniature Plug	Nut/Bolt	KF16	1	15	2.35	4.36	3.36
66884-2N158BTFT1JY	Miniature Plug	Nut/Bolt	KF40	1	15	2.35	4.36	3.36

Type J Push-On

CF Flanged

CF Flange

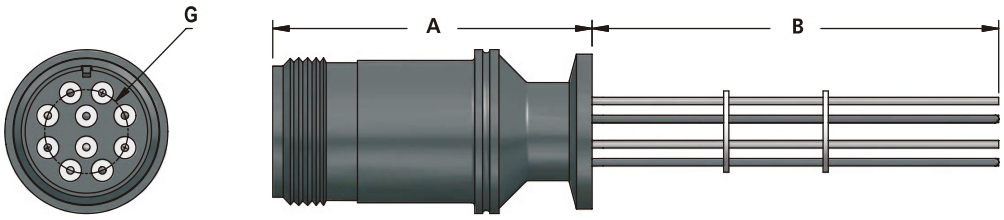

Part Number	Air Side	Vac. Side	Flange Size	T/C Pairs	Dimensions, (in.)		
					A	B	G
66882-00002TFT2JP	Pins	Pins	CF16	2	2.55	2.70	0.38
66882-00003TFT2JP	Pins	Pins	CF40	2	2.05	3.20	0.38
66882-00002TFT3JP	Pins	Pins	CF16	3	2.55	2.70	0.44
66882-00003TFT3JP	Pins	Pins	CF40	3	2.05	3.20	0.44
66882-00002TFT5JP	Pins	Pins	CF16	5	2.55	2.70	0.51
66882-00003TFT5JP	Pins	Pins	CF40	5	2.05	3.20	0.51

KF Flange

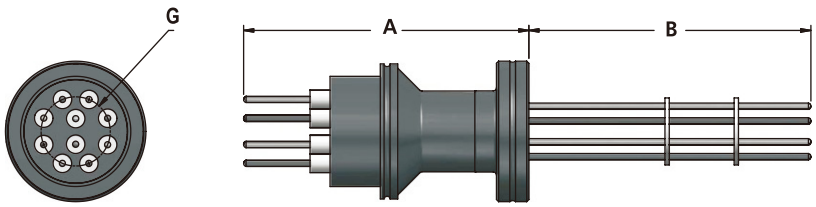

Part Number	Air Side	Vac. Side	Flange Size	T/C Pairs	Dimensions, (in.)		
					A	B	G
66882-00008TFT2JP	Pins	Pins	KF16	2	2.05	3.20	0.38
66882-00008BTFT2JP	Pins	Pins	KF40	2	2.05	3.20	0.38
66882-00008TFT3JP	Pins	Pins	KF16	3	2.05	3.20	0.44
66882-00008BTFT3JP	Pins	Pins	KF40	3	2.05	3.20	0.44
66882-00008TFT5JP	Pins	Pins	KF16	5	2.05	3.20	0.51
66882-00008BTFT5JP	Pins	Pins	KF40	5	2.05	3.20	0.51



Type K Mini Plug Plus Power
K型热电偶+电源引线

- Two nickel or copper power conductors
- Rated to 5,000 volts and 30 lamps
- Designed for use in high vacuum and UHV applications requiring both power and temperature measurements
- Feature positive wires made of Chromel® and negative wires made of Alumel®
- Temperature range from -200°C to 1,250°C
- Assemblies supplied with miniature air-side thermocouple connectors and vacuum-side thermocouple lugs with a #3-48 screw and nut

NOTE: Power leads are not supplied with connectors. Must be purchased seperataly

CF Flange, Single-Ended

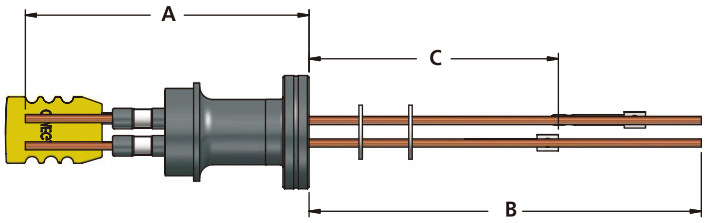

Part Number	Air Side	Vac. Side	Flange Size	Pairs	Amps/ Pin	Dimensions, (in.)		
						A	B	C
66888-2C152TFT1KY	Miniature Plug	Nut/Bolt	CF16	1	15	2.64	4.00	3.00
66888-2C153TFT1KY	Miniature Plug	Nut/Bolt	CF40	1	15	2.14	4.50	3.50
66888-2C302TFT1KY	Miniature Plug	Nut/Bolt	CF16	1	30	2.85	3.86	2.86
66888-2C303TFT1KY	Miniature Plug	Nut/Bolt	CF40	1	30	2.35	4.36	3.36
66888-2N052TFT1KY	Miniature Plug	Nut/Bolt	CF16	1	5	2.64	4.00	3.00
66888-2N053TFT1KY	Miniature Plug	Nut/Bolt	CF40	1	5	2.14	4.50	3.50
66888-2N152TFT1KY	Miniature Plug	Nut/Bolt	CF16	1	15	2.85	3.86	2.86
66888-2N153TFT1KY	Miniature Plug	Nut/Bolt	CF40	1	15	2.35	4.36	3.36

KF Flange, Single-Ended

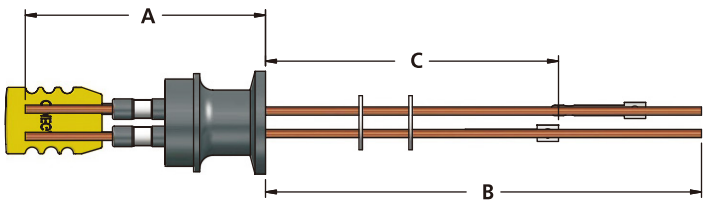

Part Number	Air Side	Vac. Side	Flange Size	T/C Pairs	Amps/ Pin	Dimensions, (in.)		
						A	B	C
66888-2C158TFT1KY	Miniature Plug	Nut/Bolt	KF16	1	15	2.14	4.50	3.50
66888-2C158BTFT1KY	Miniature Plug	Nut/Bolt	KF40	1	15	2.14	4.50	3.50
66888-2C158CTFT1KY	Miniature Plug	Nut/Bolt	KF50	1	15	2.14	4.50	3.50
66888-2C308TFT1KY	Miniature Plug	Nut/Bolt	KF16	1	30	2.35	4.36	3.36
66888-2C308BTFT1KY	Miniature Plug	Nut/Bolt	KF40	1	30	2.35	4.36	3.36
66888-2C308CTFT1KY	Miniature Plug	Nut/Bolt	KF50	1	30	2.35	4.36	3.36
68888-2N058TFT1KY	Miniature Plug	Nut/Bolt	KF16	1	5	2.14	4.50	3.50
66888-2N058ATFT1KY	Miniature Plug	Nut/Bolt	KF25	1	5	2.14	4.50	3.50
66888-2N058BTFT1KY	Miniature Plug	Nut/Bolt	KF40	1	5	2.14	4.50	2.86
66888-2N158TFT1KY	Miniature Plug	Nut/Bolt	KF16	1	15	2.35	4.36	3.36
66888-2N158BTFT1KY	Miniature Plug	Nut/Bolt	KF40	1	15	2.35	4.36	3.36

Type K Mini Plug
K型热电偶引线插头

CF Flange, Single-Ended

◆ Available in 1, 2, 3, 5, and 5 pairs

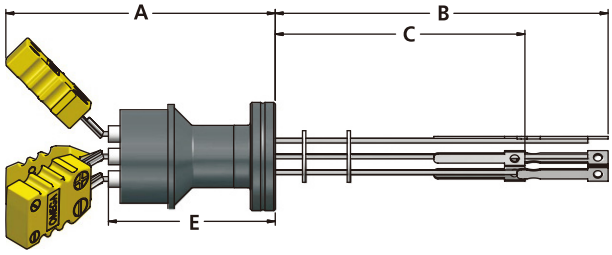

Part Number	Air Side	Vac. Side	Flange Size	T/C Pairs	Dimensions, (in.)			
					A	B	C	E
66891-00002TFT1KY	Miniature Plug	Nut/Bolt	CF16	1	1.81	4.00	3.00	1.08
66891-00003TFT1KY	Miniature Plug	Nut/Bolt	CF40	1	1.31	4.50	3.50	0.58
66891-00003ATFT1KY	Miniature Plug	Nut/Bolt	CF50	1	1.31	4.50	3.50	0.58
66891-00002TFT2KY	Miniature Plug	Nut/Bolt	CF16	2	2.61	4.00	3.00	1.88
66891-00003TFT2KY	Miniature Plug	Nut/Bolt	CF40	2	2.11	4.50	3.50	1.38
66891-00003ATFT2KY	Miniature Plug	Nut/Bolt	CF50	2	2.11	4.50	3.50	1.38
66891-00002TFT3KY	Miniature Plug	Nut/Bolt	CF16	3	2.76	4.00	3.00	2.08
66891-00003TFT3KY	Miniature Plug	Nut/Bolt	CF40	3	2.26	4.50	3.50	1.58
66891-00003ATFT4KY	Miniature Plug	Nut/Bolt	CF40	4	2.00	4.00	3.00	1.16
66891-00003ATFT5KY	Miniature Plug	Nut/Bolt	CF40	5	2.50	4.00	3.00	1.16

KF Flange, Single-Ended

◆ Available in 1, 2, 3, 5, and 5 pairs

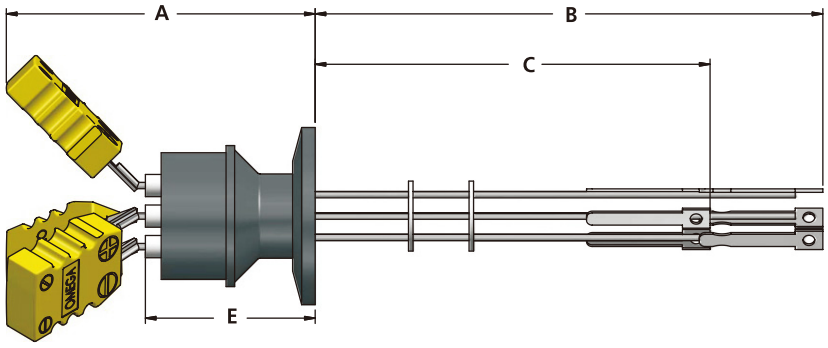

Part Number	Air Side	Vac. Side	Flange Size	T/C Pairs	Dimensions, (in.)			
					A	B	C	E
66891-00008TFT1KY	Miniature Plug	Nut/Bolt	KF16	1	1.31	4.50	3.50	0.58
66891-00008ATFT1KY	Miniature Plug	Nut/Bolt	KF25	1	1.31	4.50	3.50	0.58
66891-00008BTFT1KY	Miniature Plug	Nut/Bolt	KF40	1	1.31	4.50	3.50	0.58
66891-00008TFT2KY	Miniature Plug	Nut/Bolt	KF16	2	2.11	4.50	3.50	1.38
66891-00008ATFT2KY	Miniature Plug	Nut/Bolt	KF25	2	2.11	4.50	3.50	1.38
66891-00008BTFT2KY	Miniature Plug	Nut/Bolt	KF40	2	2.11	4.50	3.50	1.38
66891-00008CTFT2KY	Miniature Plug	Nut/Bolt	KF50	2	2.11	4.50	3.50	1.38
66891-00008TFT3KY	Miniature Plug	Nut/Bolt	KF16	3	2.26	4.50	3.50	1.58
66891-00008ATFT3KY	Miniature Plug	Nut/Bolt	KF25	3	2.26	4.50	3.50	1.58
66891-00008BTFT3KY	Miniature Plug	Nut/Bolt	KF40	3	2.26	4.50	3.50	1.58
66891-00008BTFT4KY	Miniature Plug	Nut/Bolt	KF40	4	2.00	4.00	3.00	1.16
66891-00008BTFT5KY	Miniature Plug	Nut/Bolt	KF40	5	2.50	4.00	3.00	1.16

Type K Mil-Spec Plug
K型热电偶Mil-Spec标准接头

CF Flange, Single-Ended

◆ Available in 2, 3, 5, and 10 pairs

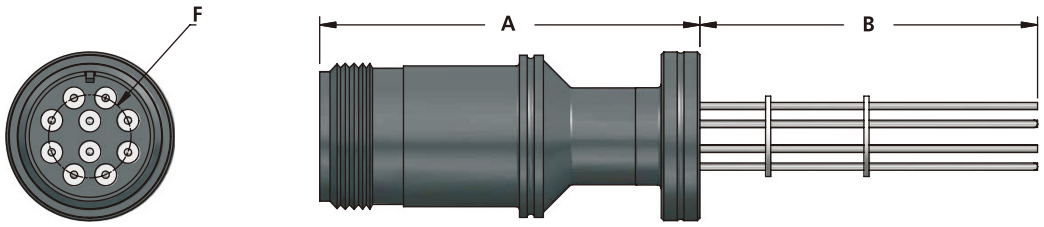

Part Number	Air Side	Vac. Side	Flange Size	T/C Pairs	Dimensions, (in.)		
					A	B	F
66893-00002TFT2KA	Mil-Spec Plug	Pins	CF16	2	2.85	2.70	0.38
66893-00003TFT2KA	Mil-Spec Plug	Pins	CF40	2	2.35	3.20	0.38
66893-00002TFT3KA	Mil-Spec Plug	Pins	CF16	3	2.85	2.70	0.44
66893-00003TFT3KA	Mil-Spec Plug	Pins	CF40	3	2.35	3.20	0.44
66893-00002TFT5KA	Mil-Spec Plug	Pins	CF16	5	2.85	2.70	0.51
66893-00003TFT5KA	Mil-Spec Plug	Pins	CF40	5	2.35	3.20	0.51
66893-00003TFTVKA	Mil-Spec Plug	Pins	CF40	10	2.53	3.50	1.03

KF Flange, Single-Ended

◆ Available in 2, 3, 5, and 10 pairs

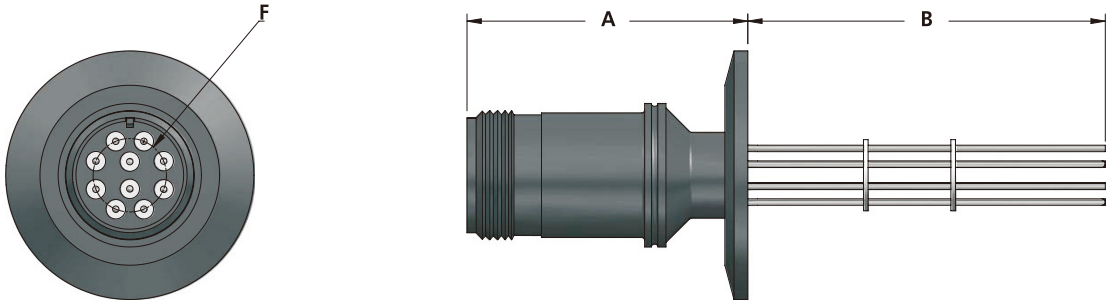

Part Number	Air Side	Vac. Side	Flange Size	T/C Pairs	Dimensions, (in.)		
					A	B	F
66893-00008TFT2KA	Mil-Spec Plug	Pins	KF16	2	2.35	3.20	0.38
66893-00008BTFT2KA	Mil-Spec Plug	Pins	KF40	2	2.35	3.20	0.38
66893-00008TFT3KA	Mil-Spec Plug	Pins	KF16	3	2.35	3.20	0.43
66893-00008ATFT3KA	Mil-Spec Plug	Pins	KF25	3	2.35	3.20	0.43
66893-00008BTFT3KA	Mil-Spec Plug	Pins	KF40	3	2.35	3.20	0.43
66893-00008TFT5KA	Mil-Spec Plug	Pins	KF16	5	2.35	3.20	0.51
66893-00008ATFT5KA	Mil-Spec Plug	Pins	KF25	5	2.35	3.20	0.51
66893-00008BTFT5KA	Mil-Spec Plug	Pins	KF40	5	2.35	3.20	0.51
66893-00008BTFTVKA	Mil-Spec Plug	Pins	KF40	10	2.53	3.50	1.03
66893-00008CTFTVKA	Mil-Spec Plug	Pins	KF50	10	2.53	3.50	1.03

CF Flange, Double-Ended

- Available in 2, 3, 5, and 10 pairs

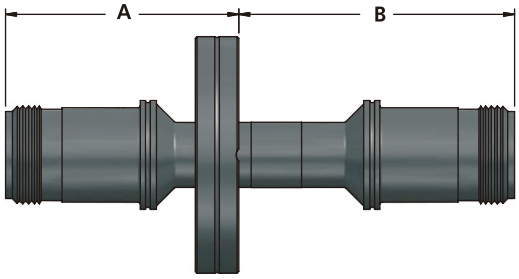

Part Number	Air Side	Vac. Side	Flange Size	T/C Pairs	Dimensions, (in.)	
					A	B
66896-00003TFD2KA	Mil-Spec Plug	Mil-Spec Plug	CF40	2	2.34	3.69
66896-00003TFD3KA	Mil-Spec Plug	Mil-Spec Plug	CF40	3	2.34	3.69
66896-00003TFD5KA	Mil-Spec Plug	Mil-Spec Plug	CF40	5	2.34	3.69
66896-00006TFDVKA	Mil-Spec Plug	Mil-Spec Plug	CF63	10	2.78	3.50

KF &ISO Flange, Double-Ended

- Available in 2, 3, 5, and 10 pairs

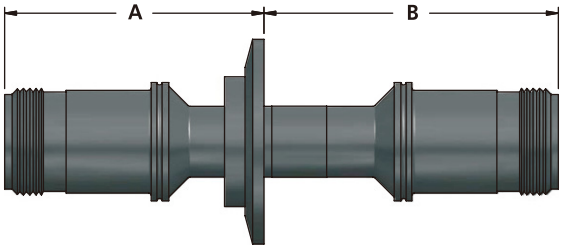

Part Number	Air Side	Vac. Side	Flange Size	T/C Pairs	Dimensions, (in.)	
					A	B
66896-00008BTFD2KA	Mil-Spec Plug	Mil-Spec Plug	KF40	2	2.34	3.69
66896-00008CTFD2KA	Mil-Spec Plug	Mil-Spec Plug	KF50	2	2.34	3.69
66896-00008BTFD3KA	Mil-Spec Plug	Mil-Spec Plug	KF40	3	2.34	3.69
66896-00008CTFD3KA	Mil-Spec Plug	Mil-Spec Plug	KF50	3	2.34	3.69
66896-00008BTFD5KA	Mil-Spec Plug	Mil-Spec Plug	KF40	5	2.34	3.69
66896-00008CTFD5KA	Mil-Spec Plug	Mil-Spec Plug	KF50	5	2.34	3.69
66896-00008DTFDVKA	Mil-Spec Plug	Mil-Spec Plug	ISO63	10	2.78	3.50

Type K Push-On
K型热电偶推入式引线

- Temperature range from -200° C to 1,250° C
- Designed for use in high vacuum and UHV applications
- Does not include connectors
- Feature positive wires made of Chromel and negative wires made of Alumel @

CF Flange, Single-Ended

- Available in 1, 2, 3, and 5 pairs

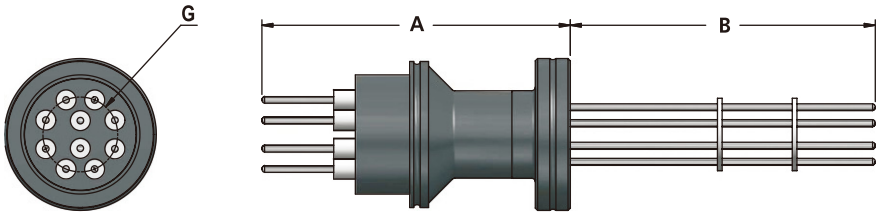

Part Number	Air Side	Vac. Side	Flange Size	T/C Pairs	Dimensions, (in.)		
					A	B	G
66890-00002TFT2KP	Pins	Pins	CF16	2	2.05	3.20	0.38
66890-00003TFT2KP	Pins	Pins	CF40	2	2.05	3.20	0.38
66890-00002TFT3KP	Pins	Pins	CF16	3	2.05	3.20	0.38
66890-00003TFT3KP	Pins	Pins	CF40	3	2.05	3.20	0.38
66890-00002TFT5KP	Pins	Pins	CF16	5	2.05	2.20	0.44
66890-00003TFT5KP	Pins	Pins	CF40	5	2.05	3.20	0.44

KF Flange, Single-Ended

- Available in 1, 2, 3, and 5 pairs

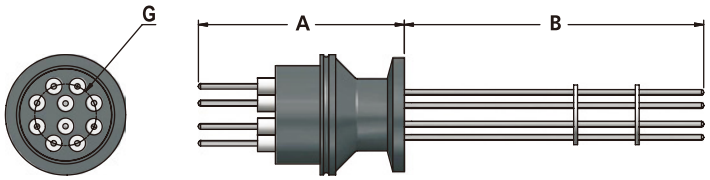

Part Number	Air Side	Vac. Side	Flange Size	T/C Pairs	Dimensions, (in.)		
					A	B	G
66890-00008TFT2KP	Pins	Pins	KF16	2	2.05	3.20	0.38
66890-00008ATFT2KP	Pins	Pins	KF25	2	2.05	3.20	0.38
66890-00008BTFT2KP	Pins	Pins	KF40	2	2.05	3.20	0.38
66890-00008CTFT2KP	Pins	Pins	KF50	2	2.05	3.20	0.38
66890-00008TFT3KP	Pins	Pins	KF16	3	2.05	3.20	0.44
66890-00008ATFT3KP	Pins	Pins	KF25	3	2.05	3.20	0.44
66890-00008BTFT3KP	Pins	Pins	KF40	3	2.05	3.20	0.44
66890-00008CTFT3KP	Pins	Pins	KF50	3	2.05	3.20	0..44
66890-00008TFT5KP	Pins	Pins	KF16	5	2.05	3.20	0.51
66890-00008BTFT5KP	Pins	Pins	KF40	5	2.05	3.20	0.51

Type R Feedthroughs

R型电偶引线

- Designed for use in high vacuum and UHV applications
- Feature positive wires made of copper and negative wires made of alloy 11 (Type R extension grade wires)
- Temperature range from 0°C to 1,450°C
- Both air-side and and vacuum-side terminate in loops and include a stainless steel nut and screw to facilitate thermocouple atachment

NOTE: Because both Type R and Type S thermocouples use identical extension grade wires, Type R feedthroughs can also be used for Type S.

CF Flange

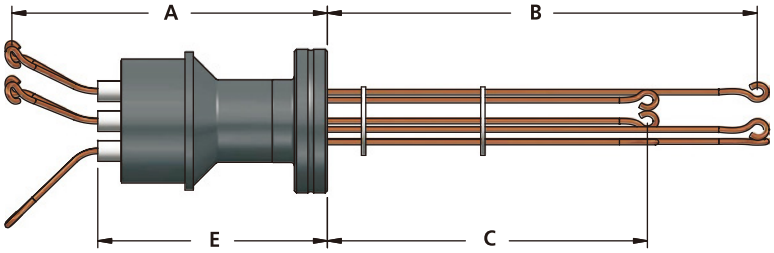

Part Number	Air Side	Vac. Side	Flange Size	T/C Pairs	Dimensions, (in.)			
					A	B	C	E
66898-00002TFT1RN	Loops	Loops	CF16	1	2.23	4.00	3.00	1.23
66898-00003TFT1RN	Loops	Loops	CF40	1	1.73	4.50	3.50	0.73
66898-00002TFT2RN	Loops	Loops	CF16	2	2.88	4.00	3.00	1.88
66898-00003TFT2RN	Loops	Loops	CF40	2	2.38	4.50	3.50	1.38
66898-00002TFT3RN	Loops	Loops	CF16	3	2.50	4.00	3.00	2.08
66898-00003TFT3RN	Loops	Loops	CF40	3	2.00	4.50	3.50	1.58
66898-00003TFT4RN	Loops	Loops	CF40	4	2.00	4.00	3.00	1.16
66898-00003TFT5RN	Loops	Loops	CF40	5	2.13	4.00	3.00	1.16

KF Flange

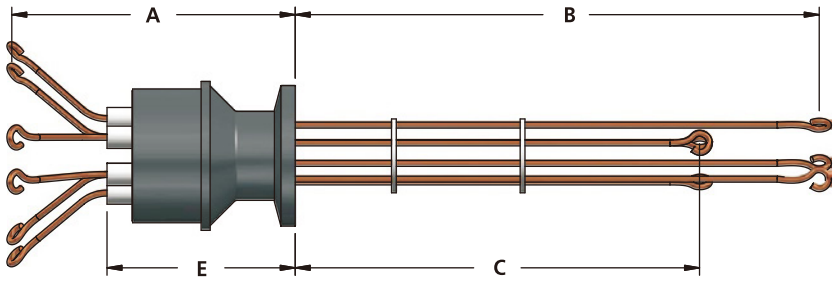

Part Number	Air Side	Vac. Side	Flange Size	T/C Pairs	Dimensions, (in.)			
					A	B	C	E
66898-00008TFT1RN	Loops	Loops	KF16	1	1.73	4.50	3.50	0.73
66898-00008ATFT1RN	Loops	Loops	KF25	1	1.73	4.50	3.50	0.73
66898-00008BTFT1RN	Loops	Loops	KF40	1	1.73	4.50	3.50	0.73
66898-00008TFT2RN	Loops	Loops	KF16	2	2.38	4.50	3.50	1.38
66898-00008BTFT2RN	Loops	Loops	KF40	2	2.38	4.50	3.50	1.38
66898-00008TFT3RN	Loops	Loops	KF16	3	2.00	4.50	3.50	1.58
66898-00008ATFT3RN	Loops	Loops	KF25	3	2.00	4.50	3.50	1.58
66898-00008BTFT3RN	Loops	Loops	KF40	3	2.00	4.50	3.50	1.58
66898-00008BTFT4RN	Loops	Loops	KF40	4	2.00	4.00	3.00	1.16
66898-00008CTFT4RN	Loops	Loops	KF50	4	2.00	4.00	3.00	1.16
66898-00008BTFT5RN	Loops	Loops	KF40	5	2.13	4.00	3.00	1.16

MAGNOX

Type T Feedthroughs

T型电偶引线

- Designed for use in high vacuum and UHV applications
- Feature positive wires made of copper and negative wires made of Constantan
- Temperature range from -200°C to 350°C
- Both air-side and vacuum-side terminate in loops and include a stainless steel nut and screw/ to facilitate thermocouple attachment

CF Flange

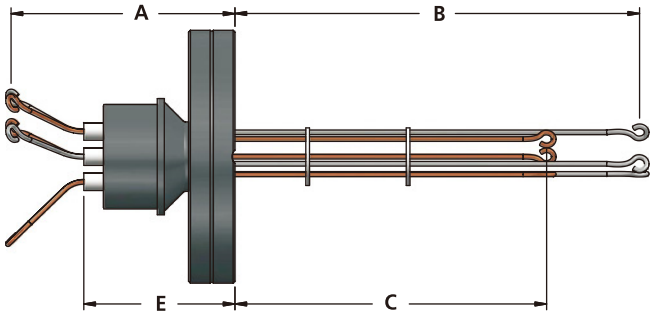

Part Number	Air Side	Vac. Side	Flange Size	T/C Pairs	Dimensions, (in.)			
					A	B	C	E
66900-00002TFT1TN	Loops	Loops	CF16	1	2.23	4.00	3.00	1.23
66900-00003TFT1TN	Loops	Loops	CF40	1	1.73	4.50	3.50	0.73
66900-00002TFT2TN	Loops	Loops	CF16	2	2.88	4.00	3.00	1.88
66900-00003TFT2TN	Loops	Loops	CF40	2	2.38	4.50	3.50	1.38
66900-00002TFT3TN	Loops	Loops	CF16	3	2.50	4.00	3.00	2.08
66900-00003TFT3TN	Loops	Loops	CF40	3	2.00	4.50	3.50	1.58
66900-00003TFT4TN	Loops	Loops	CF40	4	2.00	4.00	3.00	1.16
66900-00003TFT5TN	Loops	Loops	CF40	5	2.13	4.00	3.00	1.16

KF Flange

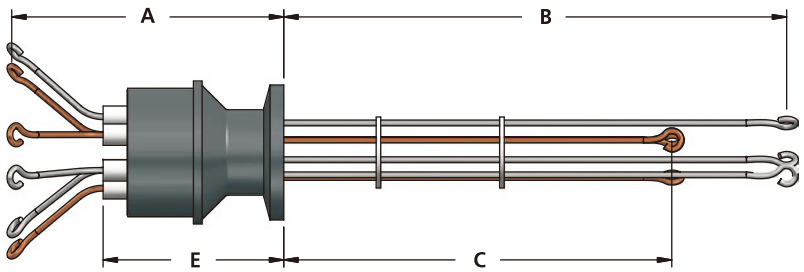

Part Number	Air Side	Vac. Side	Flange Size	T/C Pairs	Dimensions, (in.)			
					A	B	C	E
66900-00008TFT1TN	Loops	Loops	KF16	1	1.73	4.50	3.50	0.73
66900-00008ATFT1TN	Loops	Loops	KF25	1	1.73	4.50	3.50	0.73
66900-00008BTFT1TN	Loops	Loops	KF40	1	1.73	4.50	3.50	0.73
66900-00008TFT2TN	Loops	Loops	KF16	2	2.38	4.50	3.50	1.38
66900-00008BTFT2TN	Loops	Loops	KF40	2	2.38	4.50	3.50	1.38
66900-00008CTFT2TN	Loops	Loops	KF50	2	2.00	4.50	3.50	1.58
66900-00008TFT3TN	Loops	Loops	KF16	3	2.00	4.50	3.50	1.58
66900-00008BTFT3TN	Loops	Loops	KF40	3	2.00	4.50	3.50	1.58
66900-00008BTFT4TN	Loops	Loops	KF40	4	2.00	4.00	3.00	1.16
66900-000088TFT5TN	Loops	Loops	KF40	5	2.13	4.00	3.00	1.16

附录一：CF法兰公英制尺寸对照表

序号	公称通径	法兰外径【mm(inch)】	厚度【mm】	铜垫片外径【mm】	PCD【mm】	螺栓类型
A	CF16	34 (1.33")	7.6	21	27	6 x M4
B	CF25	54 (2.12")	11.5	33	41	4 x M6
C	CF40	70 (2.75")	13	48	59	6 x M6
D	CF50	86 (3.38")	16	61	72	8 x M8
E	CF63	114 (4.5")	17.5	82	92	8 x M8
F	CF80	117 (4.62")	17.5	91	102	10 x M8
G	CF100	152 (6")	20	120	130	16 x M8
H	CF130	171 (6.75")	2	141	152	18 x M8
I	CF160	203 (8")	22	171	181	20 x M8
J	CF200	254 (10")	25	222	232	24 x M8
K	CF250	305 (12")	25	272,7	284	32 x M8
L	CF275	337 (13.25")	28	294	306	30 x M10
M	CF300	368 (14.5")	28	326	338	32 x M10
N	CF350	419 (16.5")	28	376	389	36 x MI0
O	CF400	470 (18.5")	28	424	438	40 x M10

附录二：真空单位换算表

	帕斯卡 $Pa(N/m^2)$	千克力每平方厘米 Kgf/cm^2	巴 bar	毫巴 mbar	标准大气压 atm	托 torr	毫米贡柱 mmHg	磅每平方英寸 $psi(ib/in^2)$
Pa	1	$1.02X10^{-5}$	$1X10^{-5}$	0.01	$9.87x10^{-6}$	$7.5x10^{-3}$	$7.5x10^{-3}$	$1.45x10^{-6}$
Kgf/cm^2	$9.8X10^4$	1	0.98	980.67	0.967	735.56	735.56	14.2
bar	$1X10^5$	1.02	1	1000	0.987	750.06	750.06	14.5
mbar	100	$1.02x10^{-8}$	0.001	1	$9.87x10^{-4}$	0.75	0.75	$1.45x10^{-4}$
atm	101325	1.03	1.01	1013.25	1	760	760	14.7
torr	133.32	$1.36x10^{-3}$	$1.33x10^{-3}$	1.33	$1.32x10^{-3}$	1	1	$1.93x10^{-3}$
InH2o	249.09	$2.54x10^{-3}$	$2.49x10^{-3}$	2.49	$2.46x10^{-3}$	1.87	1.87	$3.61x10^{-3}$
mmHg	133.32	$1.36x10^{-3}$	$1.33x10^{-3}$	1.33	$1.32x10^{-3}$	1	1	$1.93x10^{-3}$
PSI	6895	$7.03x10^{-2}$	$6.90x10^{-2}$	68.95	$6.81x10^{-2}$	51.715	51.715	1

附录三：温度单位换算表

	K	°C	°F
1 K=	1	℃+273.15	5/9*(°F+459.67)
1 °C =	K-273.15	1	1
1°F=	9/5-459.67	9/5 +32	5/9*(°F-32)

附录四：长度单位换算表

	m	ft	in
1 m=	1	3.28	3.9x10
1 ft =	$3.1x10^{-1}$	1	1.2x10
1 in=	$3.1x10^{-2}$	$8.3x10^{-2}$	1

附录五：流导和漏率单位换算表

	pa*m³ /s	mbar*l.s	l torr*l/s	sccm
l pa*m³ /s=	l	10	7.5	$5.92x10^{-2}$
l mbar*l.s=	$1x10^{-1}$	l	$7.5x10^{-1}$	5.92x10
l torr*l/s=	$1.33x10^{-2}$	$1.33x10^{-2}$	l	7.89x10
l sccm=	$1.69x10^{-2}$	$1.69x10^{-2}$	$1.27x10^{-3}$	l

附录六：抽速单位换算表

	pa*m³ /s	l/min	m³/h	cft/min
l l/m=	l	60	3.6	2.12
l l/min=	$1.67x10^{-2}$	l	$6x10^{-2}$	3.54x10-2
l m³/h=	$2.8x10^{-1}$	$1.67x10^{-1}$	l	5.9x10-1
l cft/min=	$4.7x10^{-1}$	$2.83x10^{-1}$	1.69	l

附录七：20℃空气中不同压力下的分子平均自由程

l P(torr)=	l	10^{-3}	10^{-4}	10^{-5}	10^{-6}	10^{-9}
l λ(cm)=	$4.72x10^{-3}$	4.72	4.72x10	$4.72x10^{2}$	$4.72x10^{3}$	$4.72x10^{8}$

附录八：不同压强下的分子密度

l P(torr)=	l	10^{-3}	10^{-4}	10^{-5}	10^{-6}	10^{-9}
l λ(cm)=	$4x10^{16}$	$4x10^{13}$	$4x10^{12}$	$4x10^{11}$	$4x10^{10}$	$4x10^{7}$

附录九：真空泵选择公式

T=(V/S)x2.303xlog(P1/P2)

T:抽气时间(s),V: 被抽腔体容积(L), S:抽气速度(L/s), P1：起始压力(Pa), P2:达到压力(Pa)。
例如:
1.100 升腔体, 需要10 分钟从大气抽到 20Pa,如何选择真空泵?
S=(V/T)x2.303x10g(P1/P2)
=(100/10)x2.303x10g(100000/20)
=10x2.303x3.699=85(L/min)
=1.42(L/s)，需要选择4L/s的真空泵。
2.100 升腔体,用8L/s 真空泵,从大气抽到 200Pa,需要多长时间?
T=(V/S)x2.303xl0g(P1/P2)
=(100/8)x2.303xlog(100000/200)
=77s，抽气时间需要77秒。

附录十：抽气时间估算公式

T=8V/S

V: 被抽腔体容积 (升),S:抽气速度 (升/秒)，(适合大气到133Pa压力范围)。
例如:
100 升腔体,用8L/s真空泵,从大气抽到 133Pa,需要用多长时间?
T=8V/S=8*100/8=100s，抽气时间需要100秒。

附录十一：真空表读数与绝对真空度的换算

绝对真空度P≈100,000*(1-ϕ/0.1)Pa, ϕ:真空表读数的绝对值。
例如:真空表读数为-0.075，则绝对真空度P≈100,000*(1-0.075/0.1)≈25,000Pa
真空表读数为-0.097，则绝对真空度P≈100,000*(1-0.097/0.1)≈3.000Pa
真空表读数为-685mmHg，则绝对真空度P≈100,000*(1-685/760)≈10,500Pa
真空表读数为-700mmHg，则绝对真空度P≈100,000*(1-700/760)≈7,800Pa

元素周期表

Periodic Table of the Elements

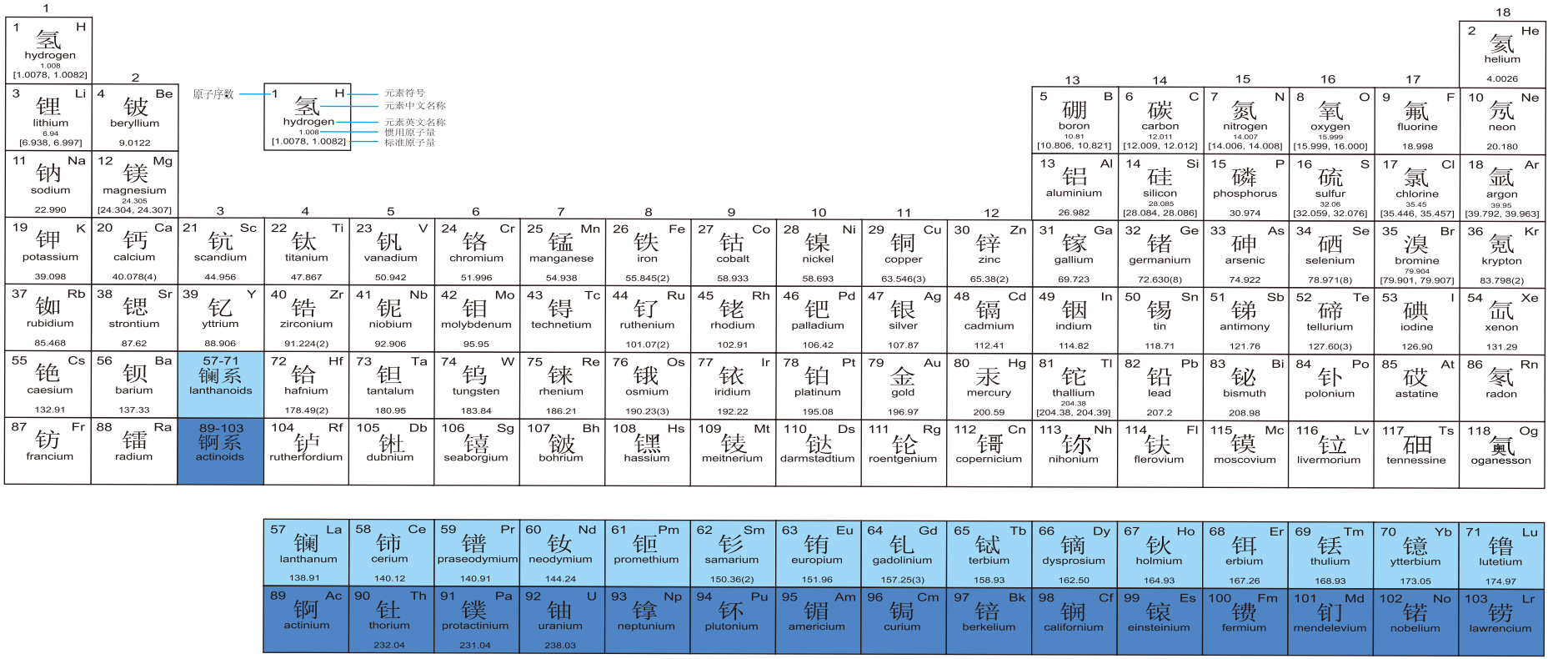

因我们而与众不同

www.magnox.com.cn

Suzhou Magnox Hygienic Materials Co., Ltd
No.10 Xihenggang Street, Yangchenghu Town,
Xiangcheng Area, Suzhou City.
Tel:+86-0512-65168151
E-mail:service@magnox.com.cn

我们的技术文件仅用于告知我们的客户。针对一些特定应用的测试条件获得的实验数据和结果，其有效性尚依赖于许多我们不可控的因素。因此，用户有责任根据自己特定需求仔细核实上述结果的有效性和产品的适用性。根据该目录中所列信息引起的争议将不予支持。技术参数如有更改，恕不另行通知。产品图片包含的某些附件可能不作为所印目录号的标准配件提供。

VN/I MS-001-VN002-202604